searchlight

3404-4/3406-6/3408-8

Ver:1.0 –08/12/2017

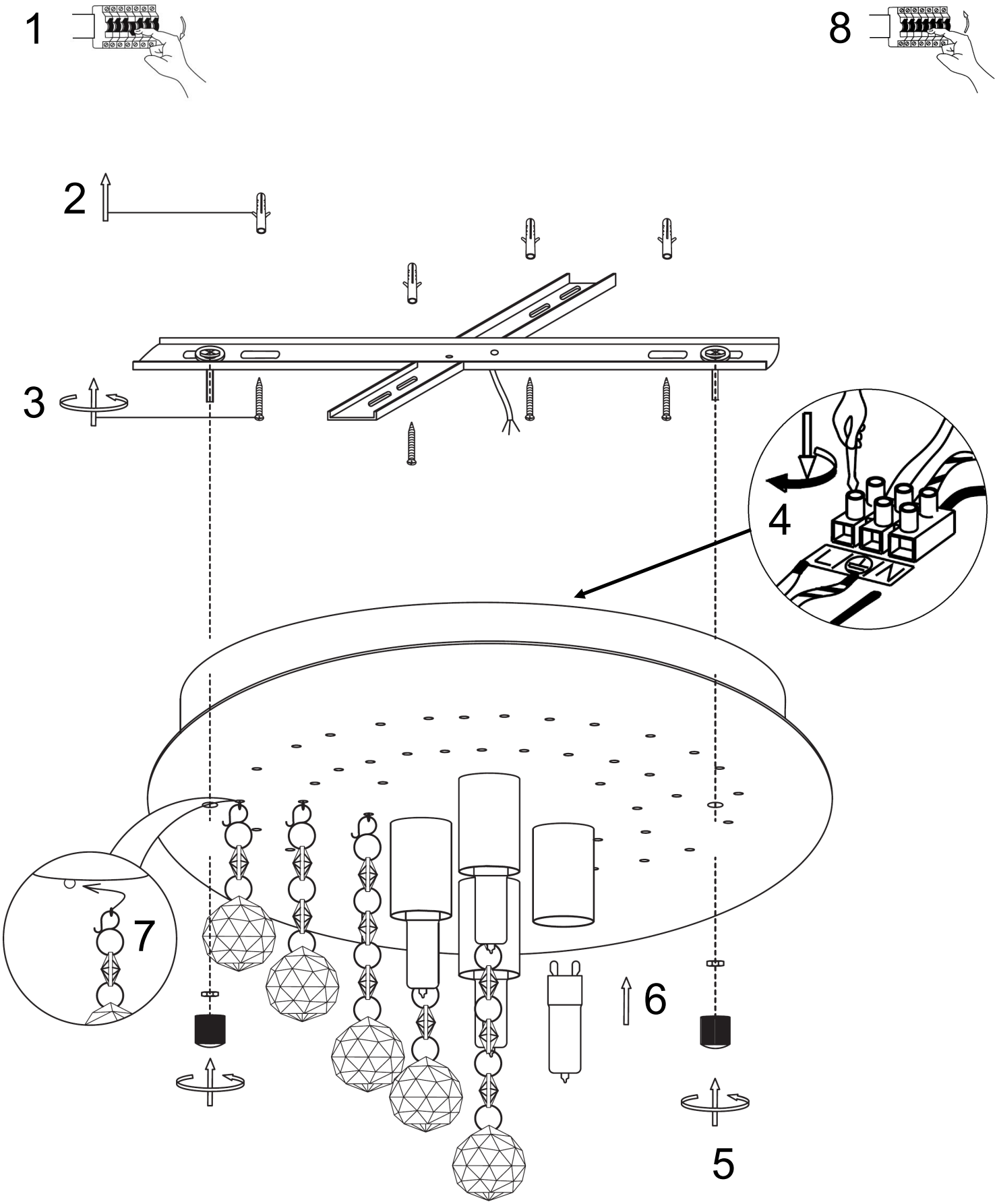

SAFETY INFORMATION: (Please retain for future reference)

- Always turn off the mains supply before commencing the installation of this fitting .
- This is a Class 1 product and does requires an Earth connection – 230 (240) Volts – 50Hz AC.
- This product must be installed in accordance with the national building regulations, if in doubt consult a qualified electrician.
- This fitting is suitable for installation in Indoor locations only .
- Do not mount the fitting in a damp atmosphere.
- Do not stare at the operating lamp when using LED lamps .
- The Luminaire should be positioned so that prolonged staring into the luminaire at a distance closer than 0.2m is not expected
- Ensure sufficient access to the fitting to enable safe maintenance.

LED INFORMATION:

- We recommend LED lamps only.
- Do not exceed the maximum wattage and bulb type stated on the lamp holder.
- This fitting is suitable for dimming when use dimmable LED bulbs.

AFTERCARE AND MAINTENANCE:

- Always disconnect power supply when servicing or cleaning.
- Clean only with a dry or slightly damp cloth.
- Do no use any abrasive cloths or cleaners as this may damage the product