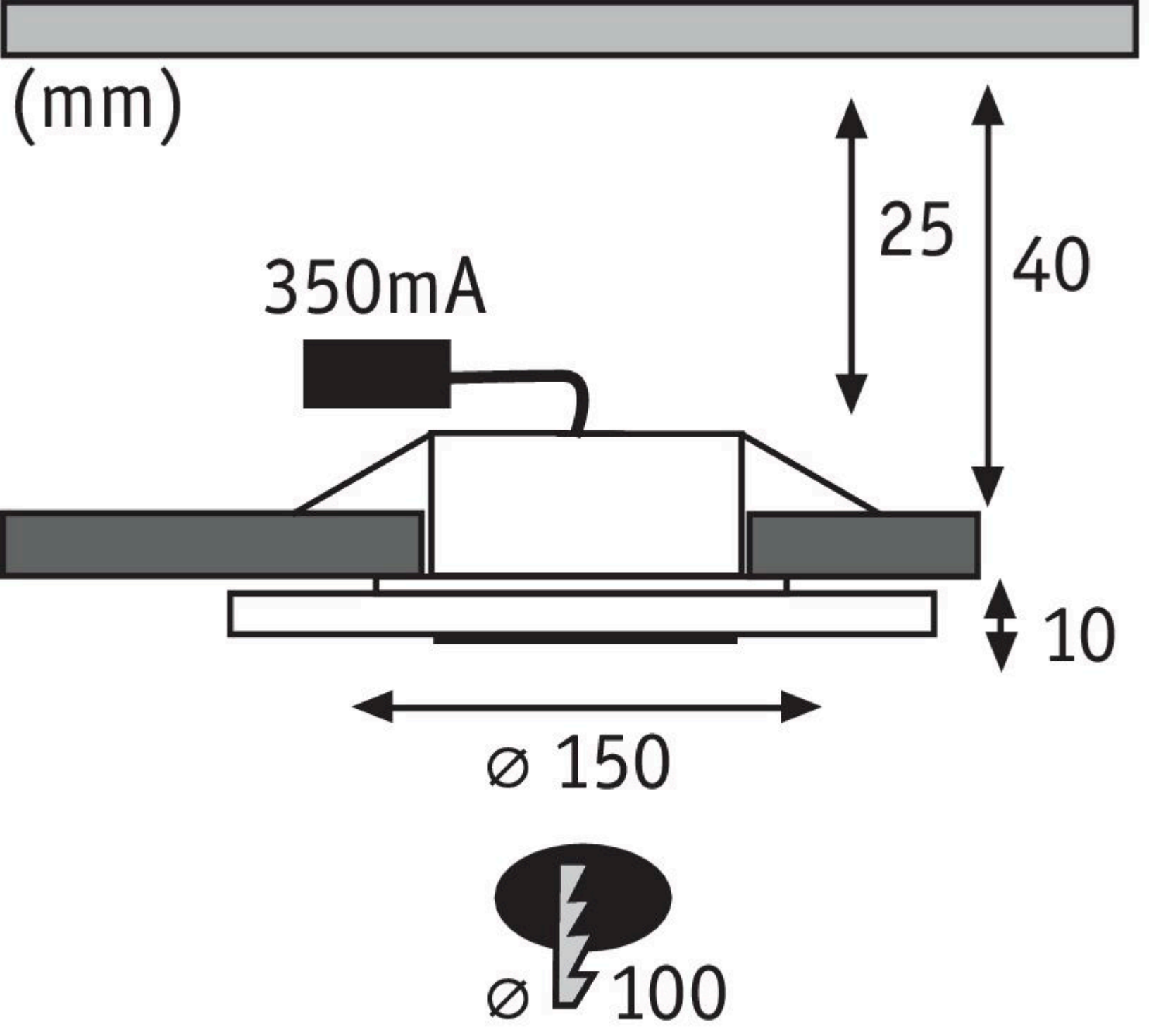
(mm)
25
40
350mA
10
⌀ 150
⌀ 100