orion

Installation / Montageanweisungen
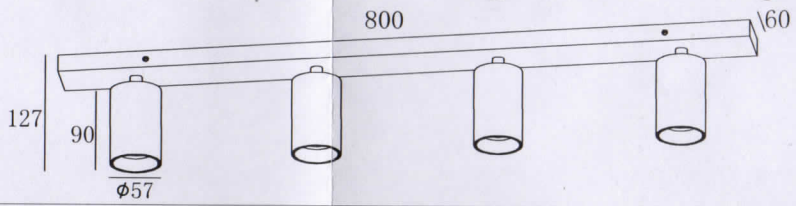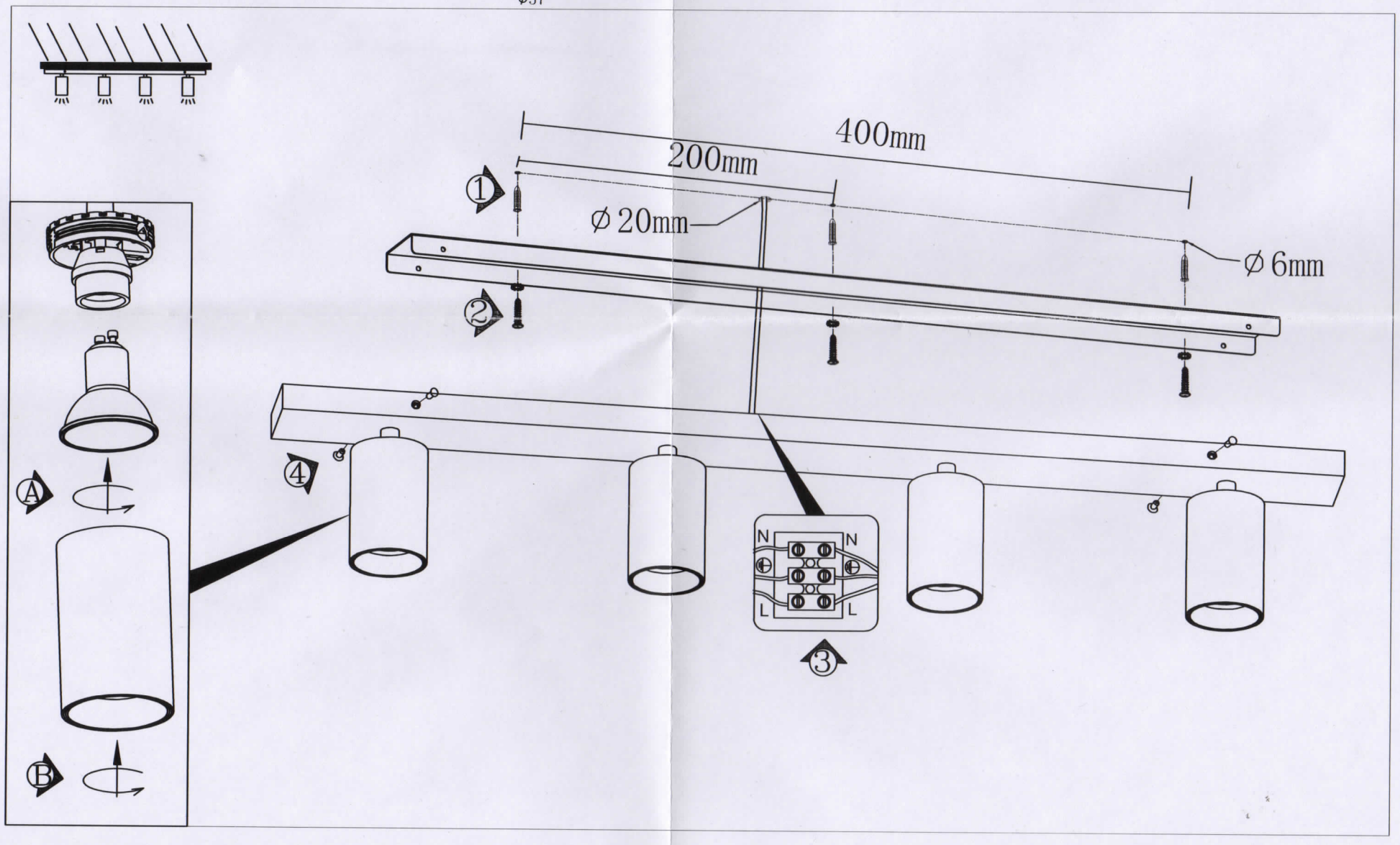
STR 10-493/4