Grok

CIRCULAR / INWARD / CANOPY 4 / Ø3000 / ON-OFF, 0..10V, DALI

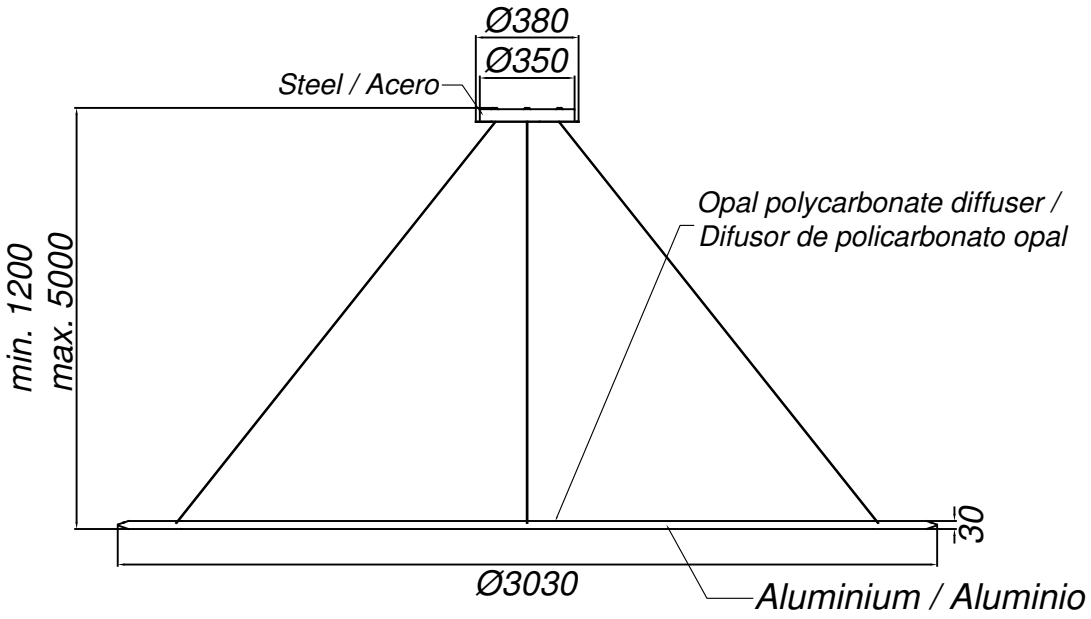

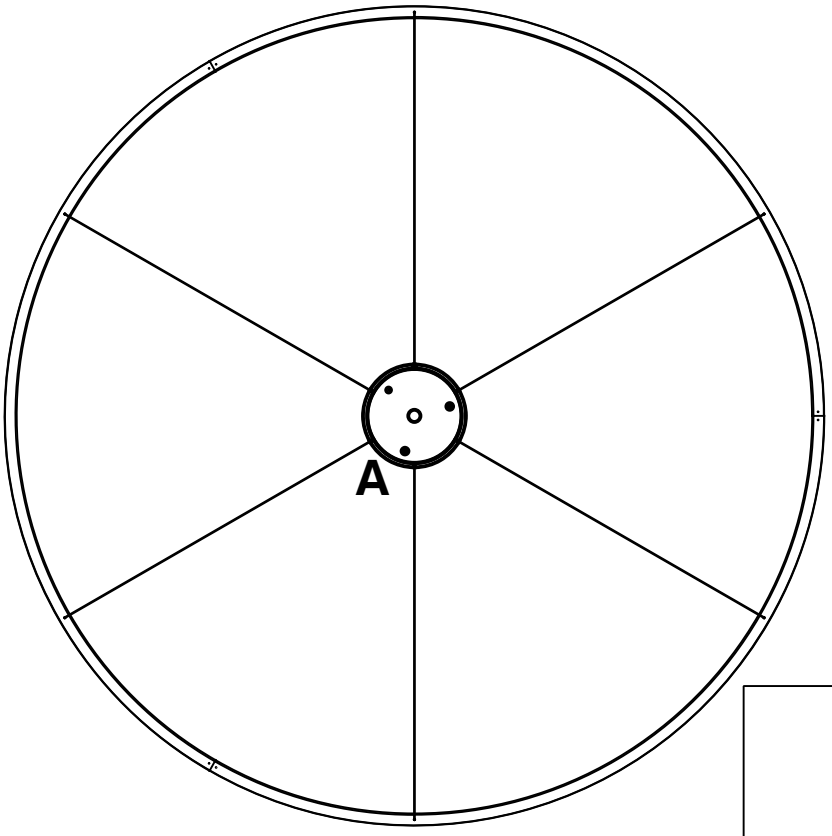

TEMPLATE A

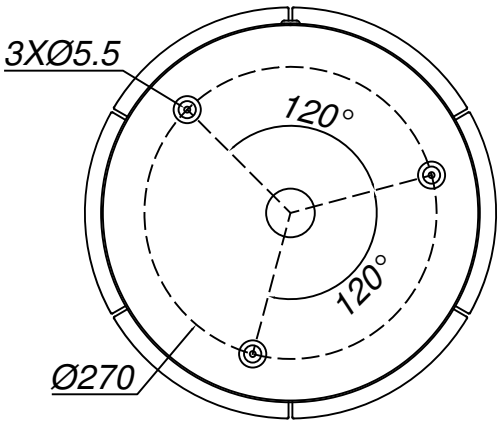

03-04-2018