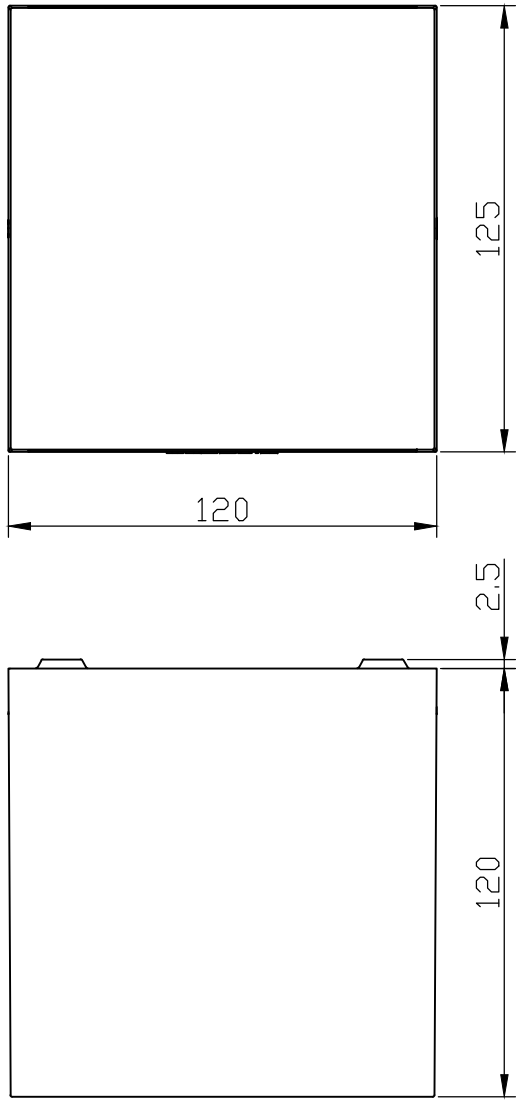
125
120
2.5
120

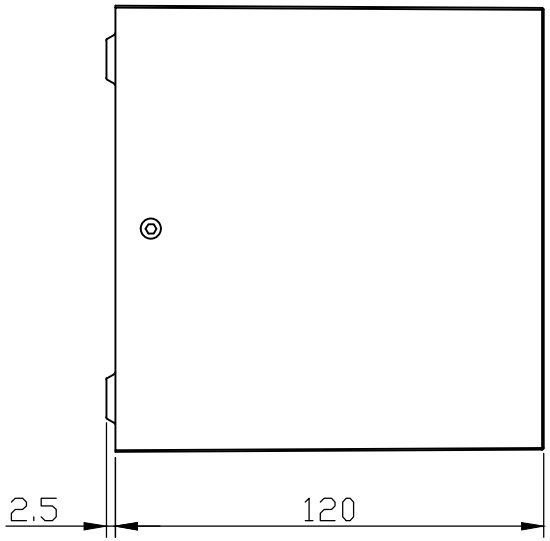
2.5
120

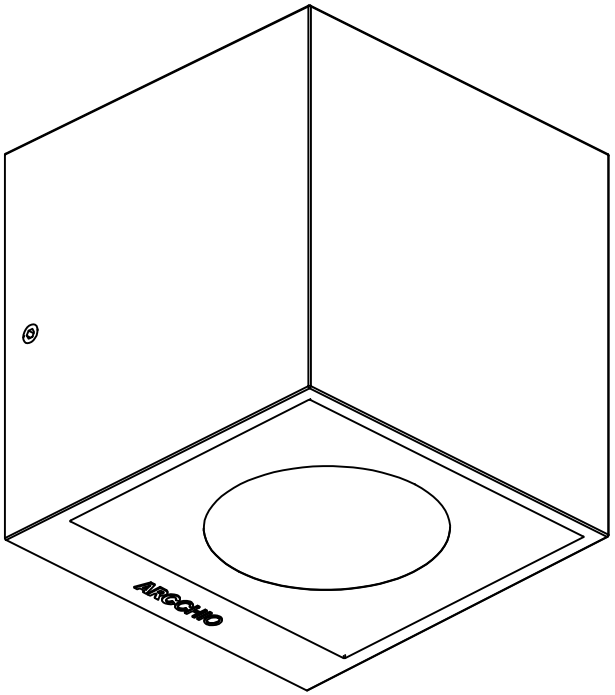
ARCHO