Paulmann

IP20

Info

www.paulmann.com

Paulmann Licht GmbH
Quezinger Feld 2
31832 Springe
Germany

www.paulmann.com

Art.-Nr.: 701.96/97/98/702.08/09/10/52/53/54/55/56/57/703.09/10/11/12/36/37/38/704.07/08/58/59/60/705.92/93/94/99 PLIR 11/17 CE

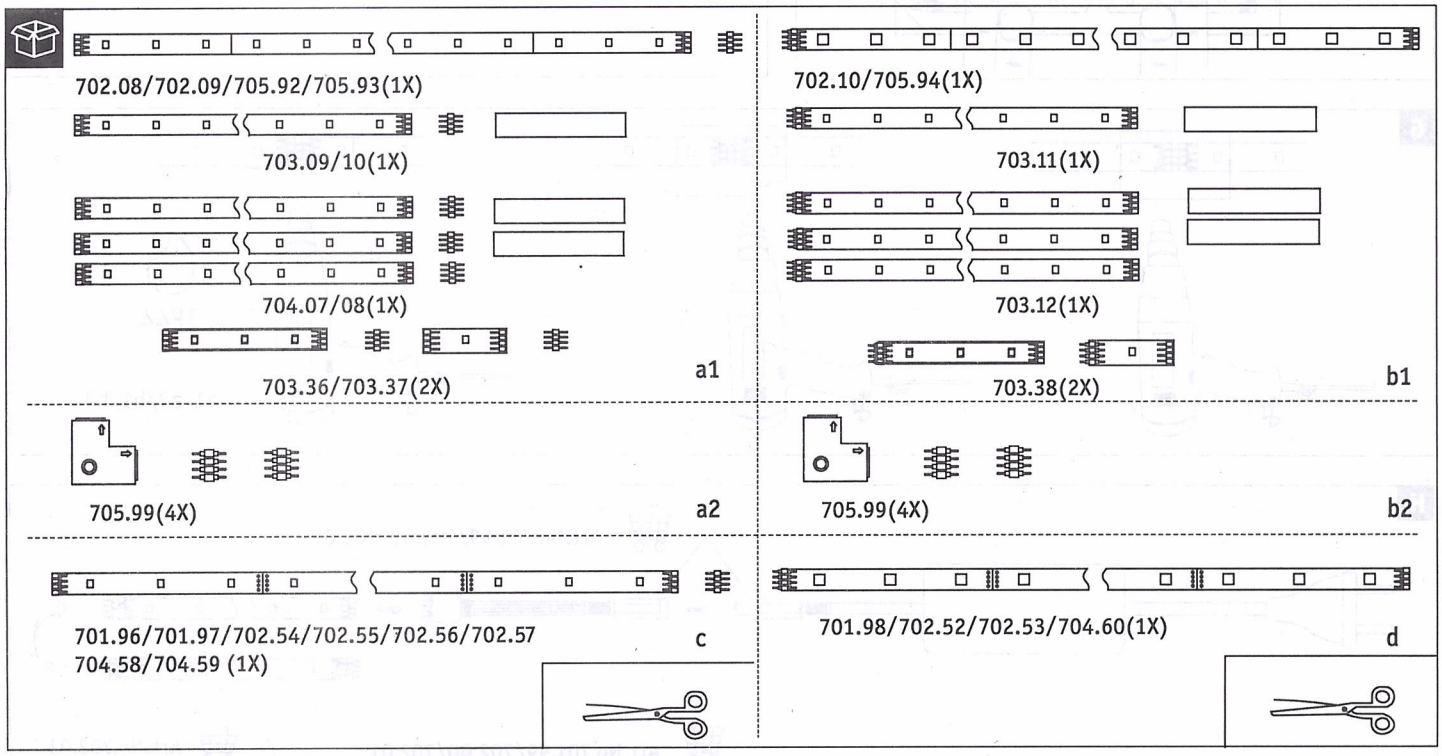

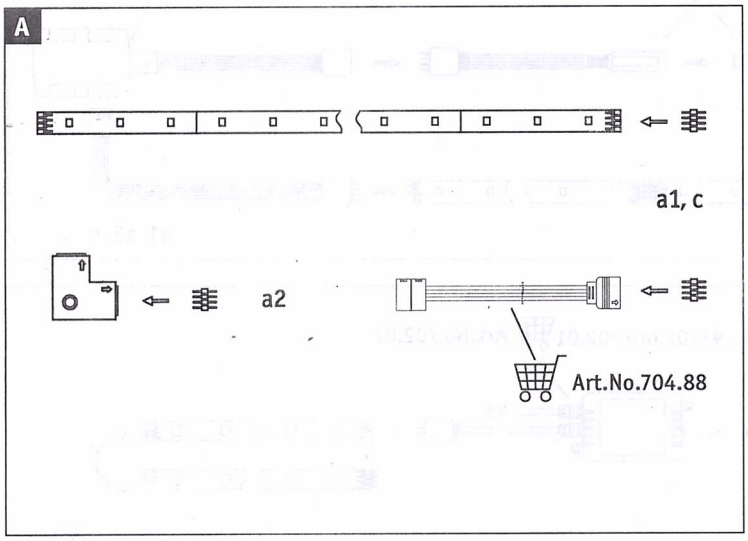

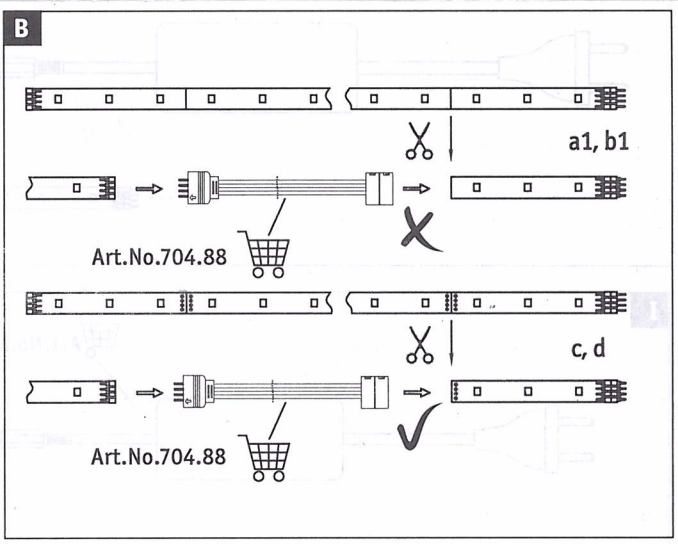

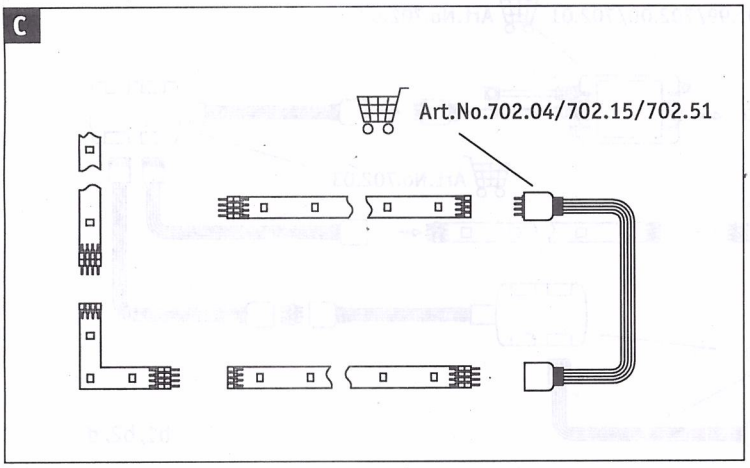

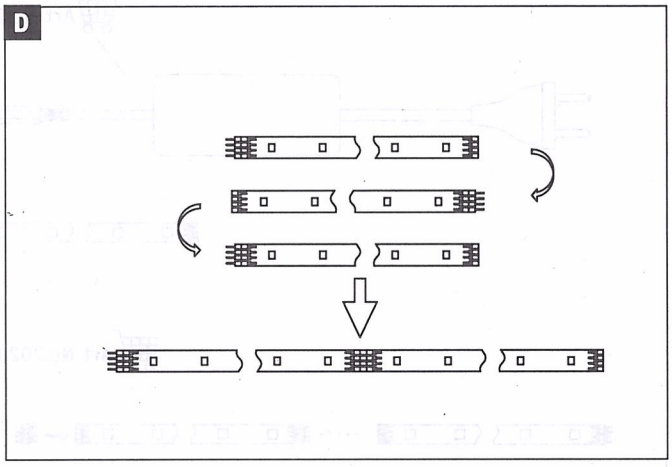

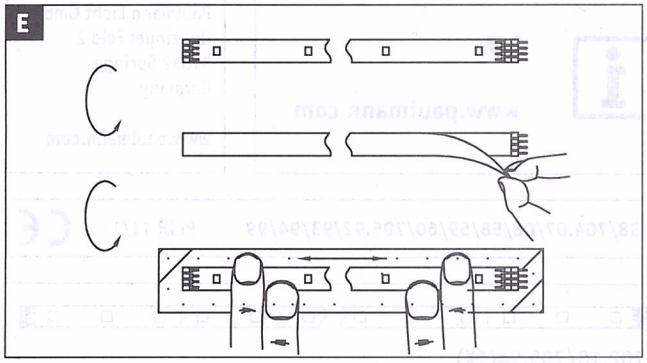
E

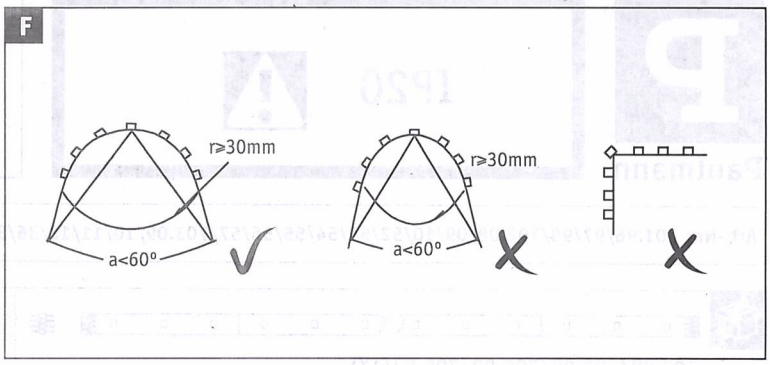
F
r≥30mm
a<60°
r≥30mm
a<60°

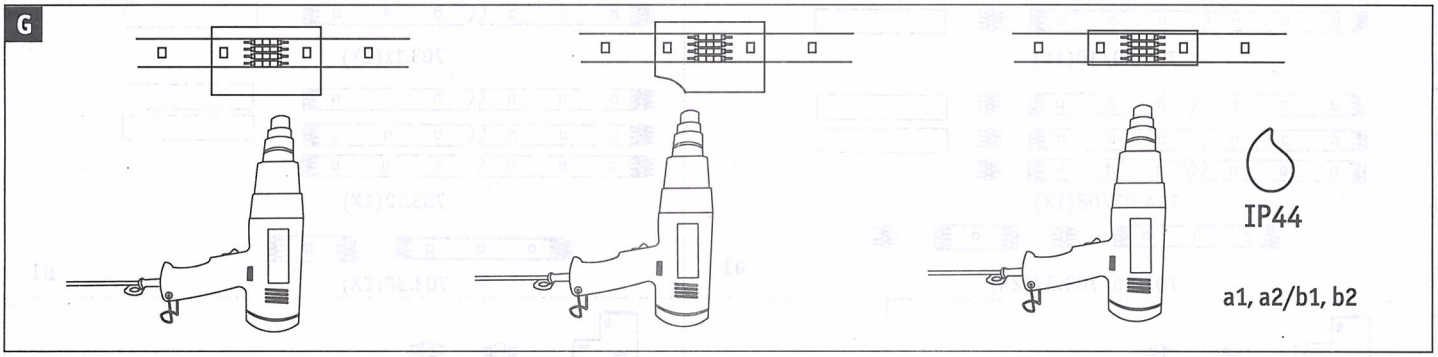
G
IP44
a1, a2/b1, b2

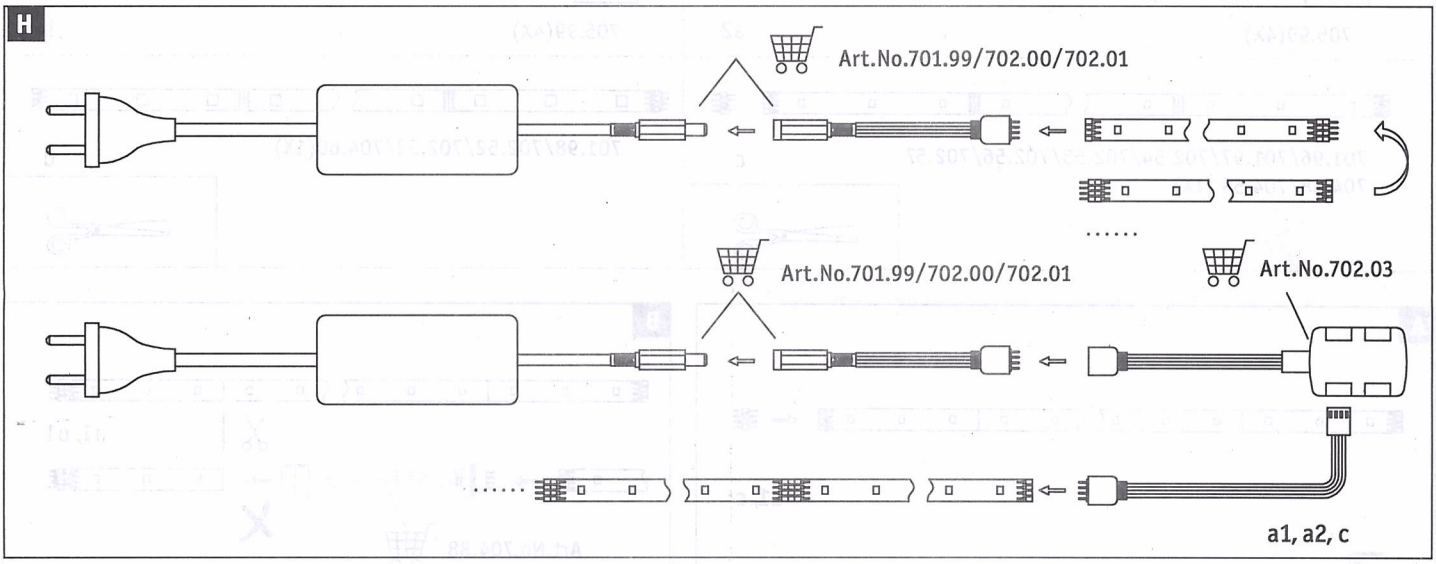
H
Art.No.701.99/702.00/702.01
Art.No.701.99/702.00/702.01
Art.No.702.03
a1, a2, c

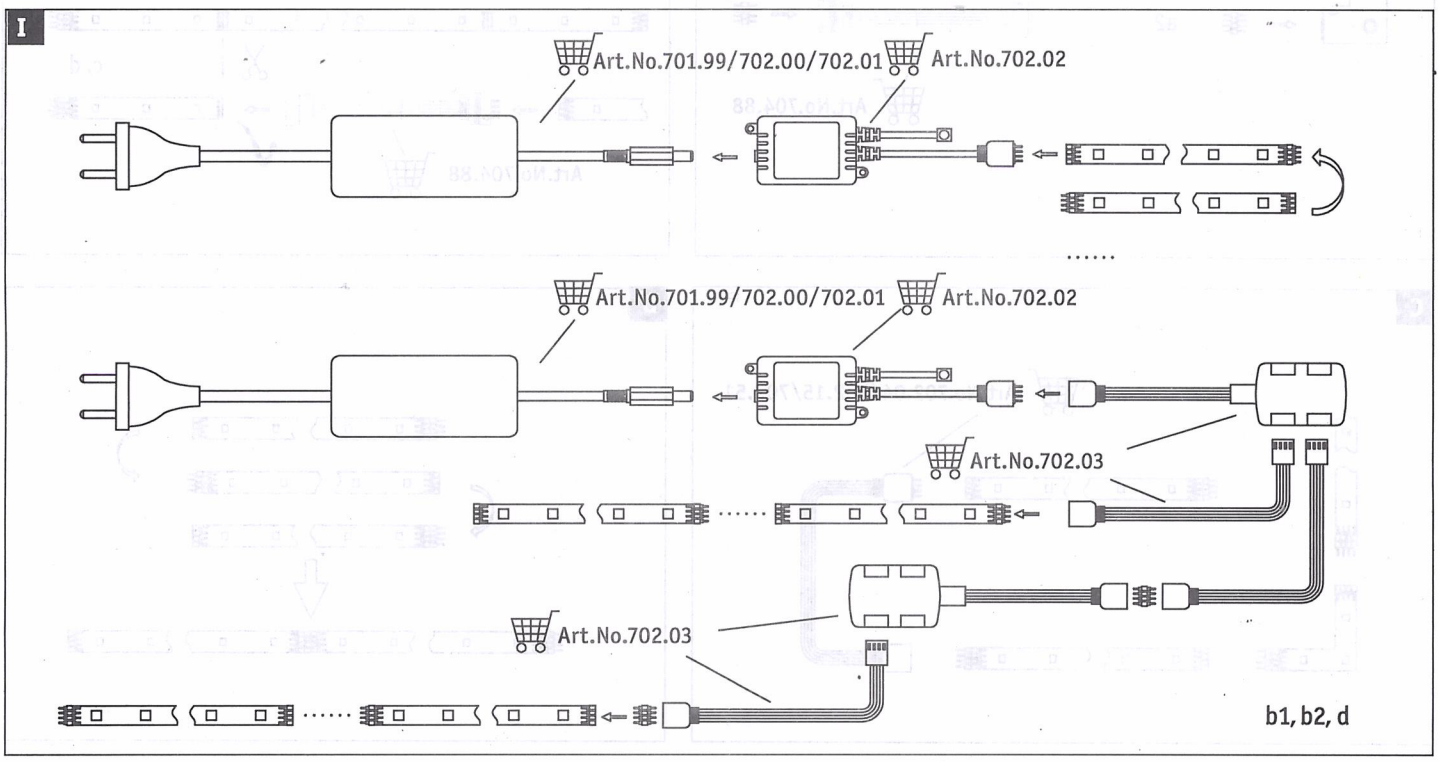
I
Art.No.701.99/702.00/702.01
Art.No.702.02
Art.No.701.99/702.00/702.01
Art.No.702.02
Art.No.702.03
Art.No.702.03
b1, b2, d