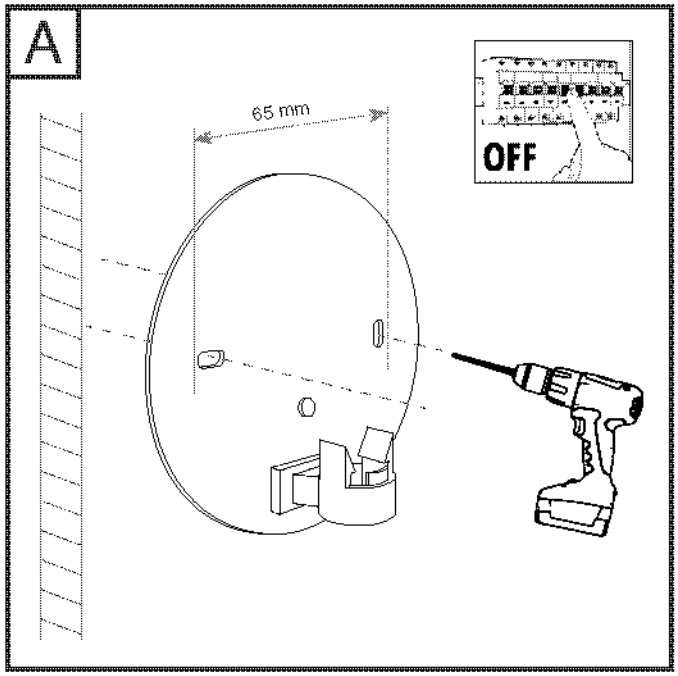
A
65 mm
OFF

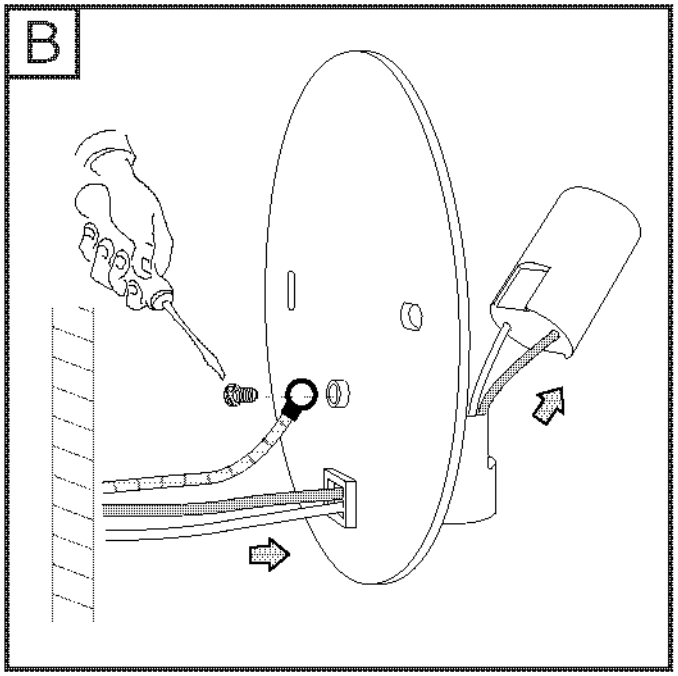
B

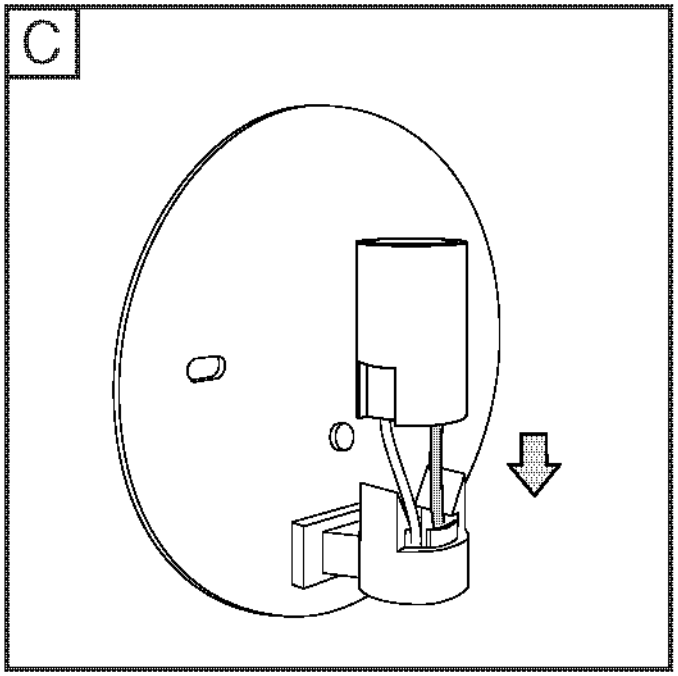
C

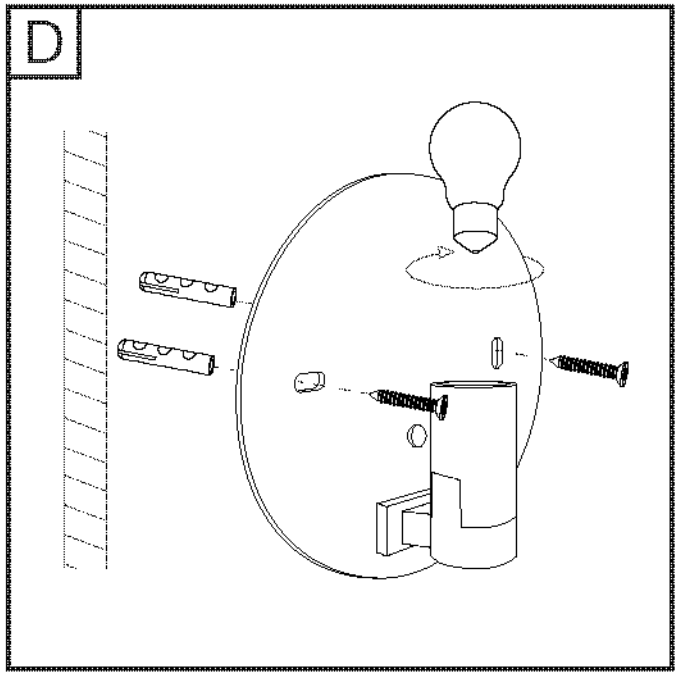
D

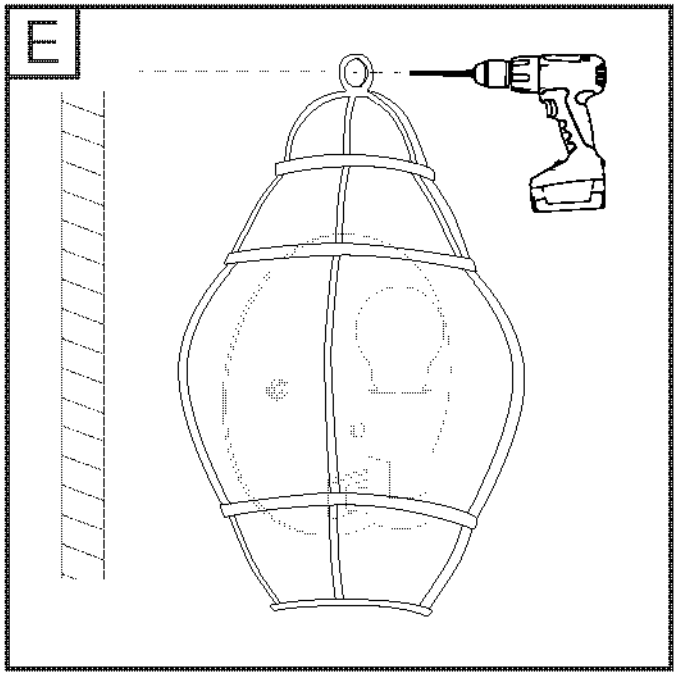
E

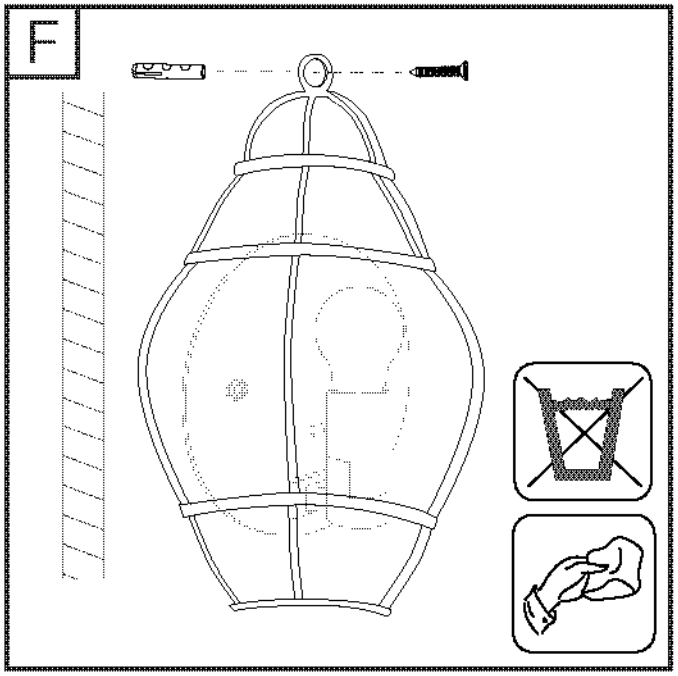
F