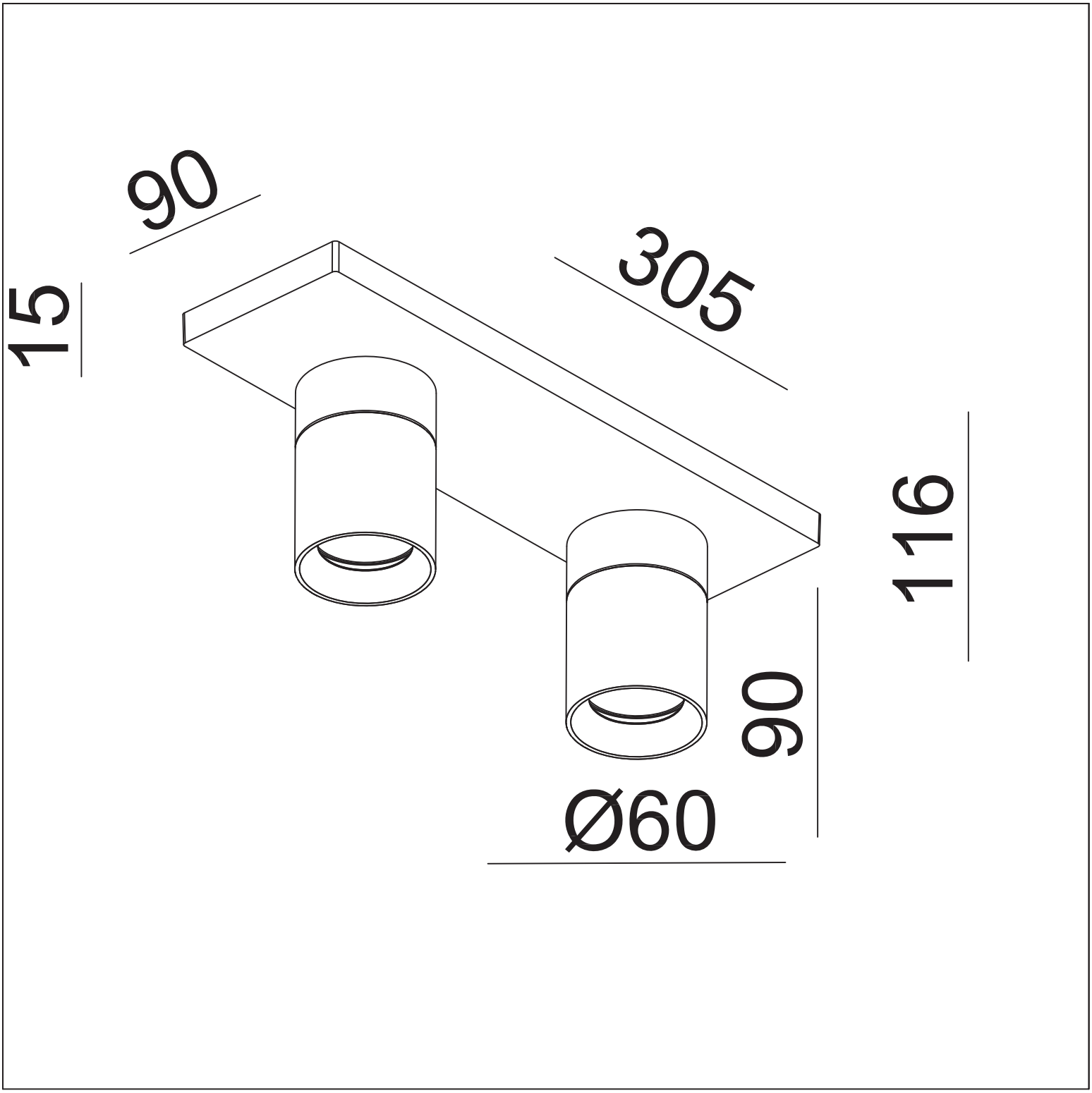

ARCCHIO

9928100