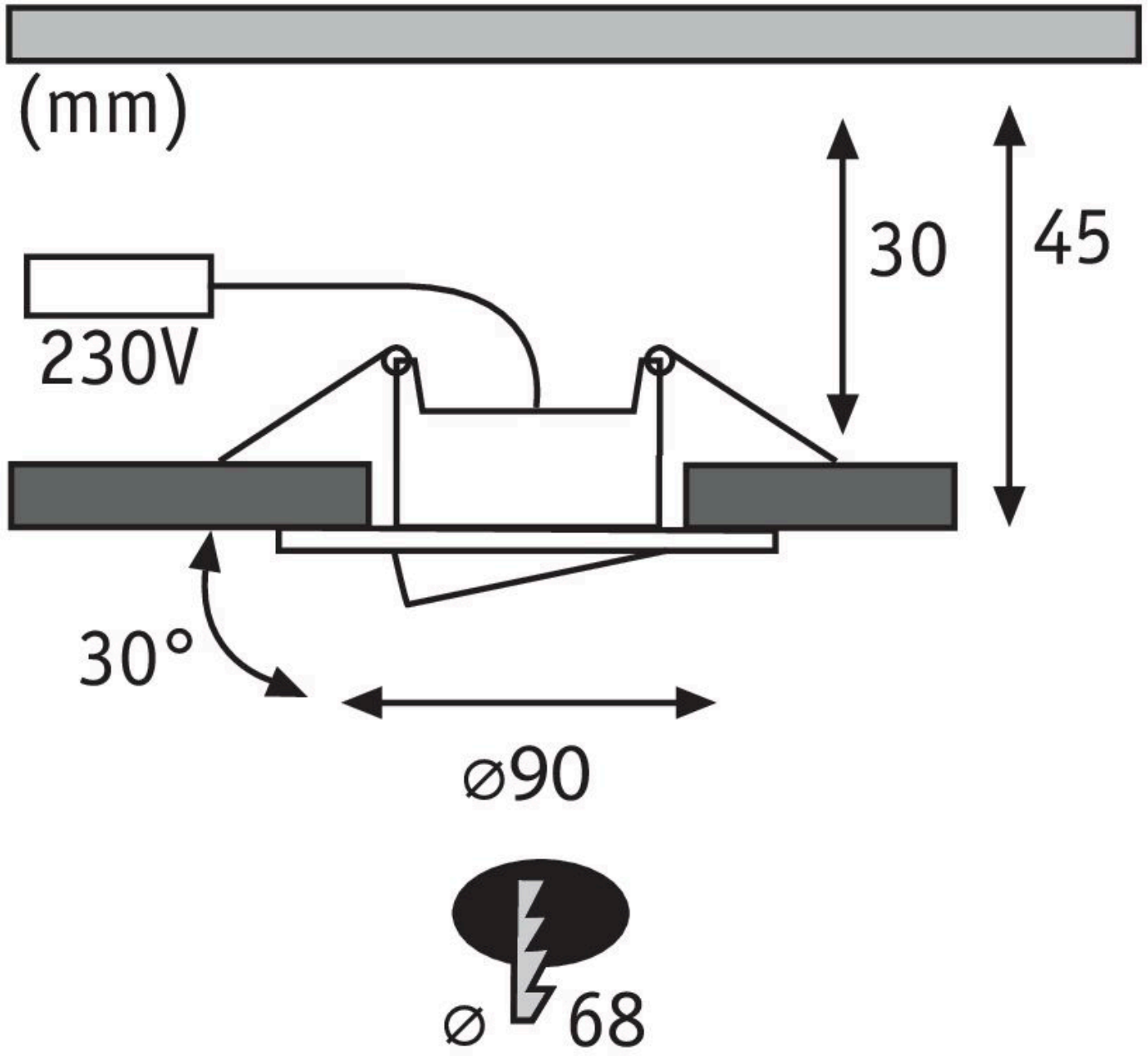
(mm)
30
45
230V
30°
⌀90
⌀ 68