LOOM DESIGN

1

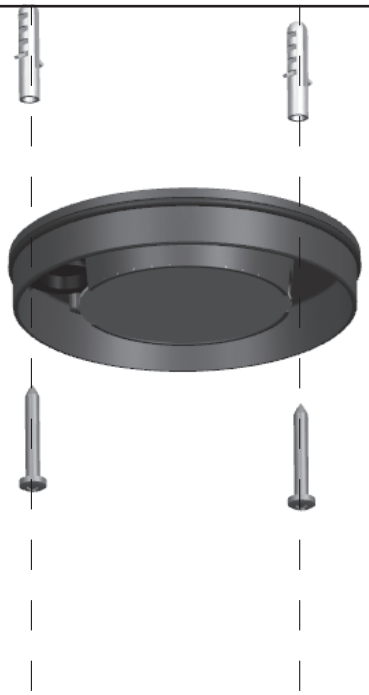

2

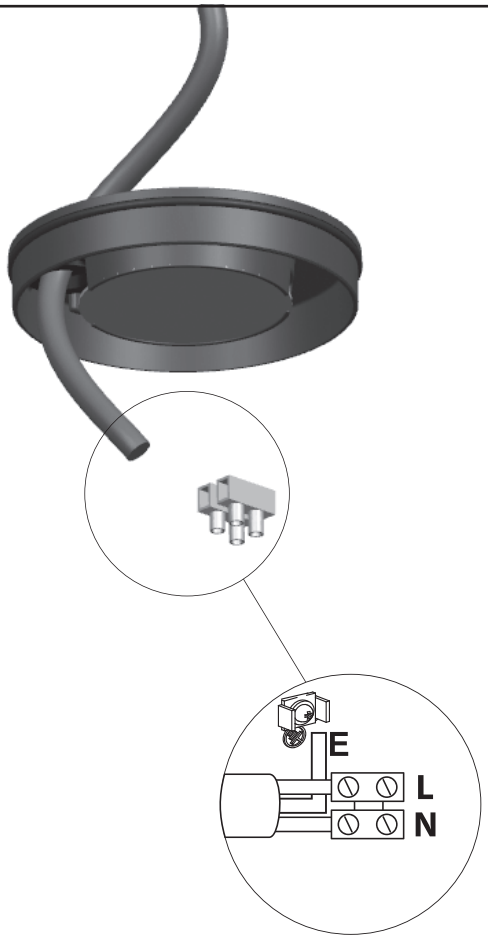

3

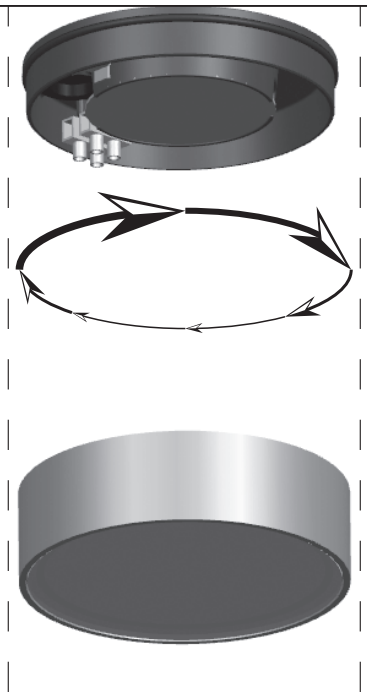

4

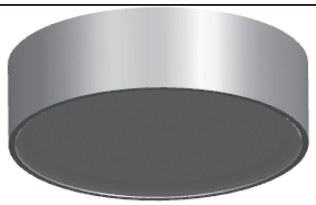

2400429000