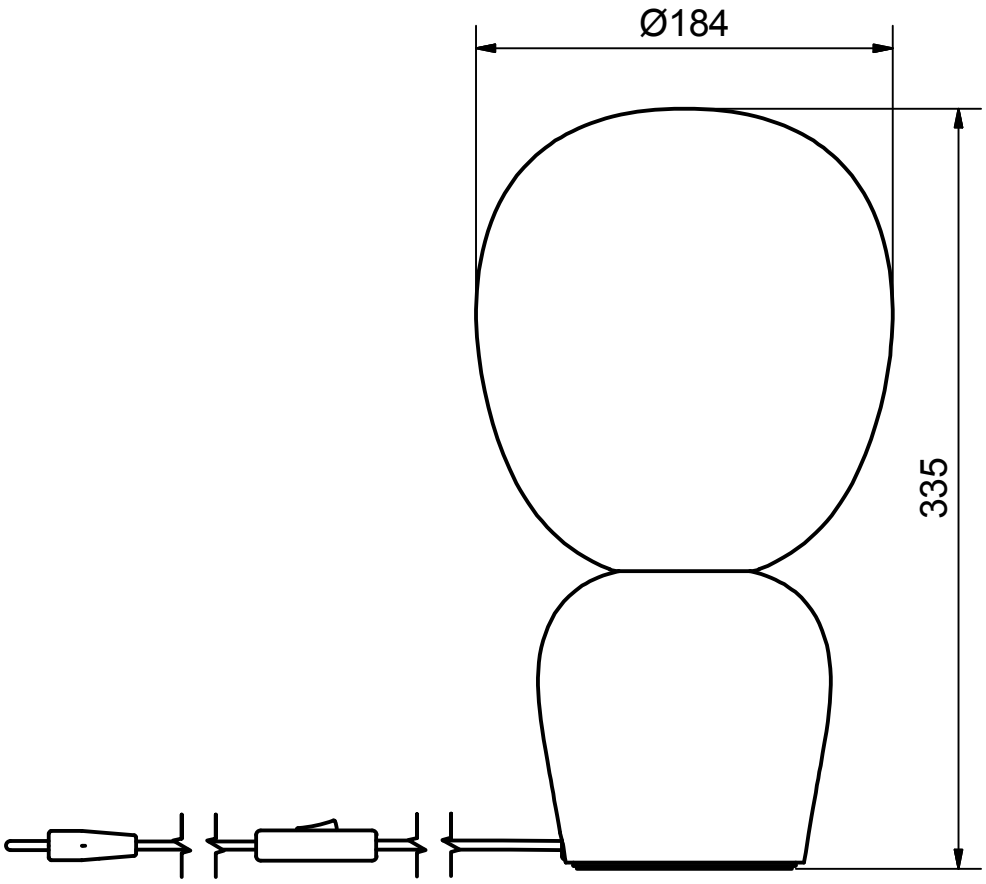

Description

Bordlampa G9

BELID
LIGHT FROM SWEDEN

SE-432 95 VÅRBERG, Sweden
Phone +46 340 662500 | www.belid.se

Dimensional drawing
Måttskiss

Product family	BUDDY
Scale 0,3 : 1	Date 2018-01-19
Part	**B-4001**G

Drawing: C:\Temp\NTI_1247996_cb91488-e921-4c2e-8611-cca8fe6b6082\B-4001 måttskiss.idw