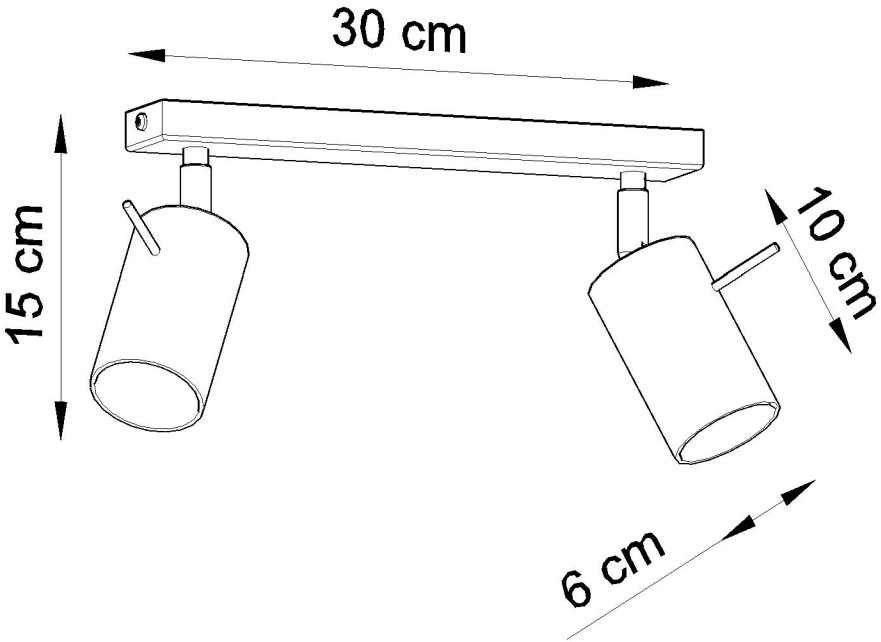
30 cm
15 cm
10 cm
6 cm