searchlight

ASSEMBLY INSTRUCTIONS

IP44

6560

QL 01015

CE
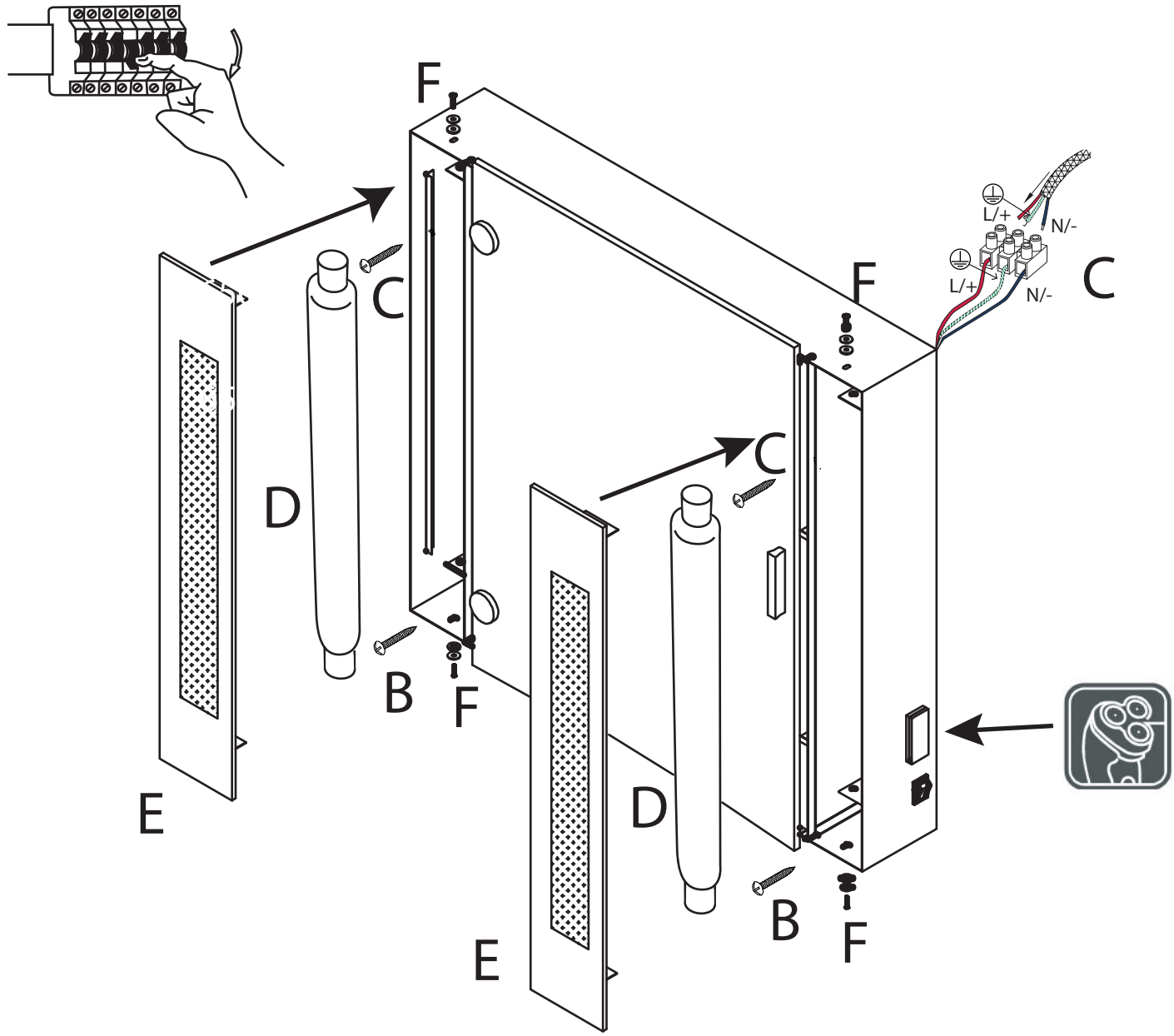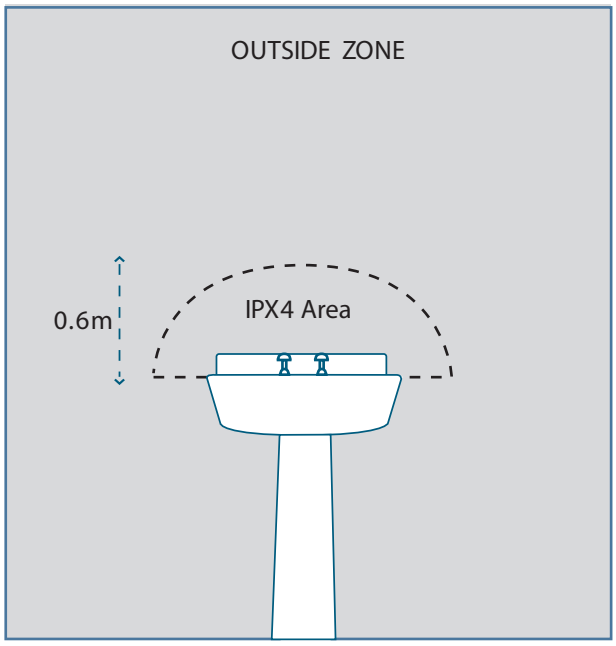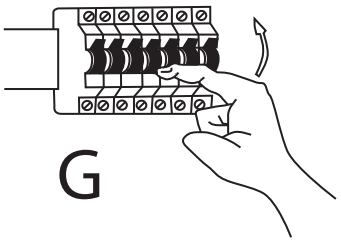
A