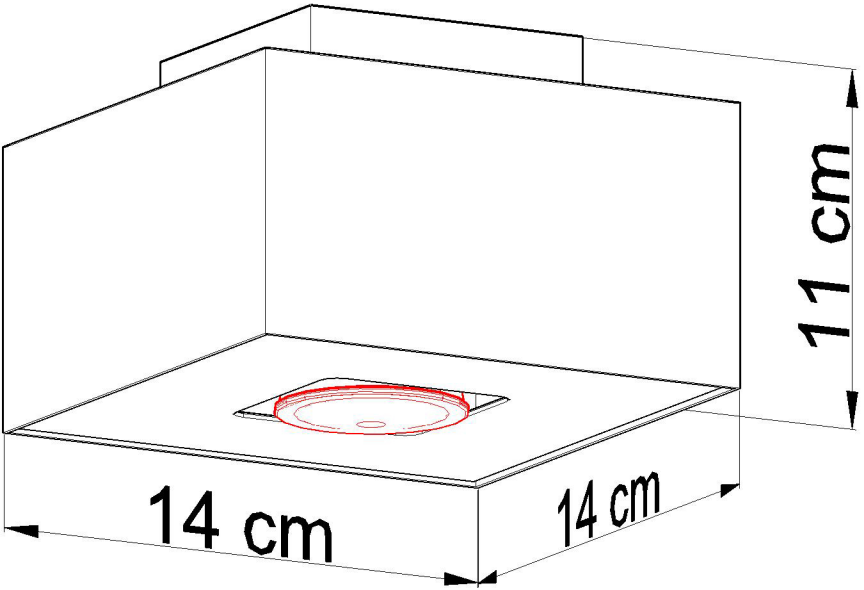
11 cm
14 cm
14 cm