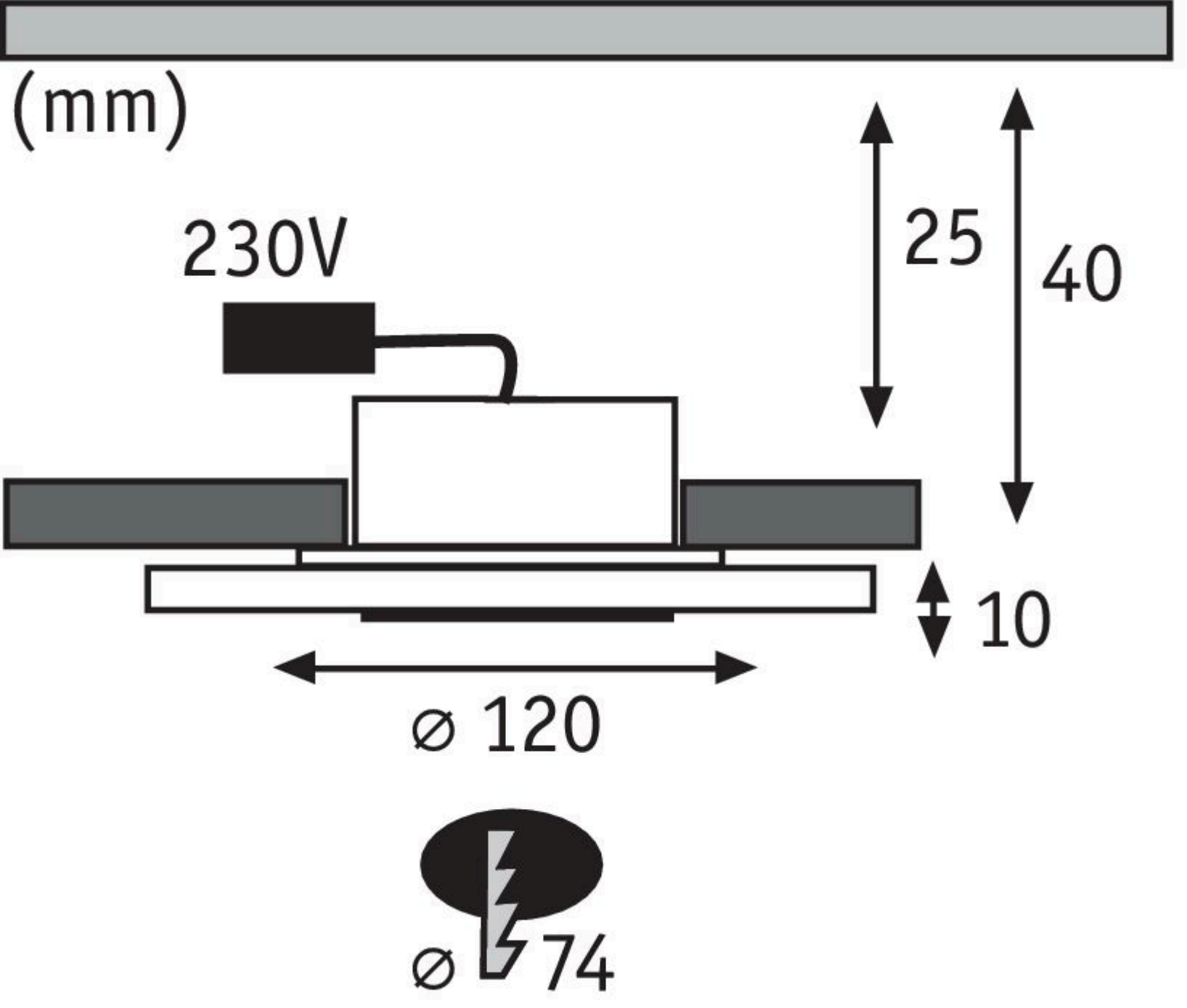
(mm)
230V
25
40
10
⌀ 120
⌀ 74