Brilliant
THE JEWEL IN LIGHTING

Carmen Wood
72029...
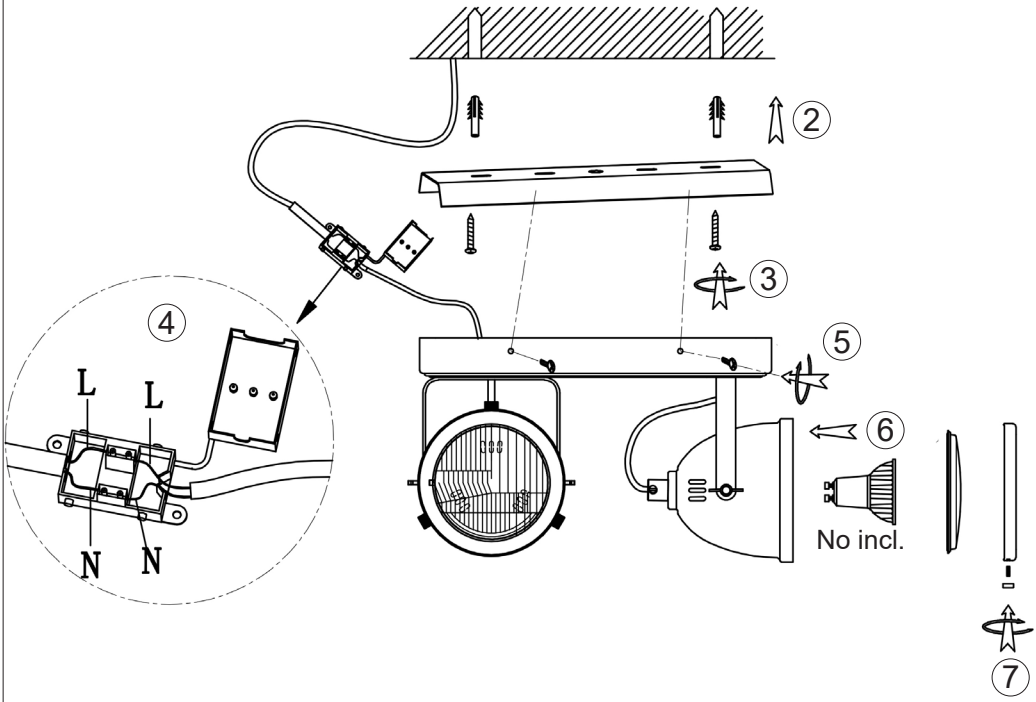
12.17