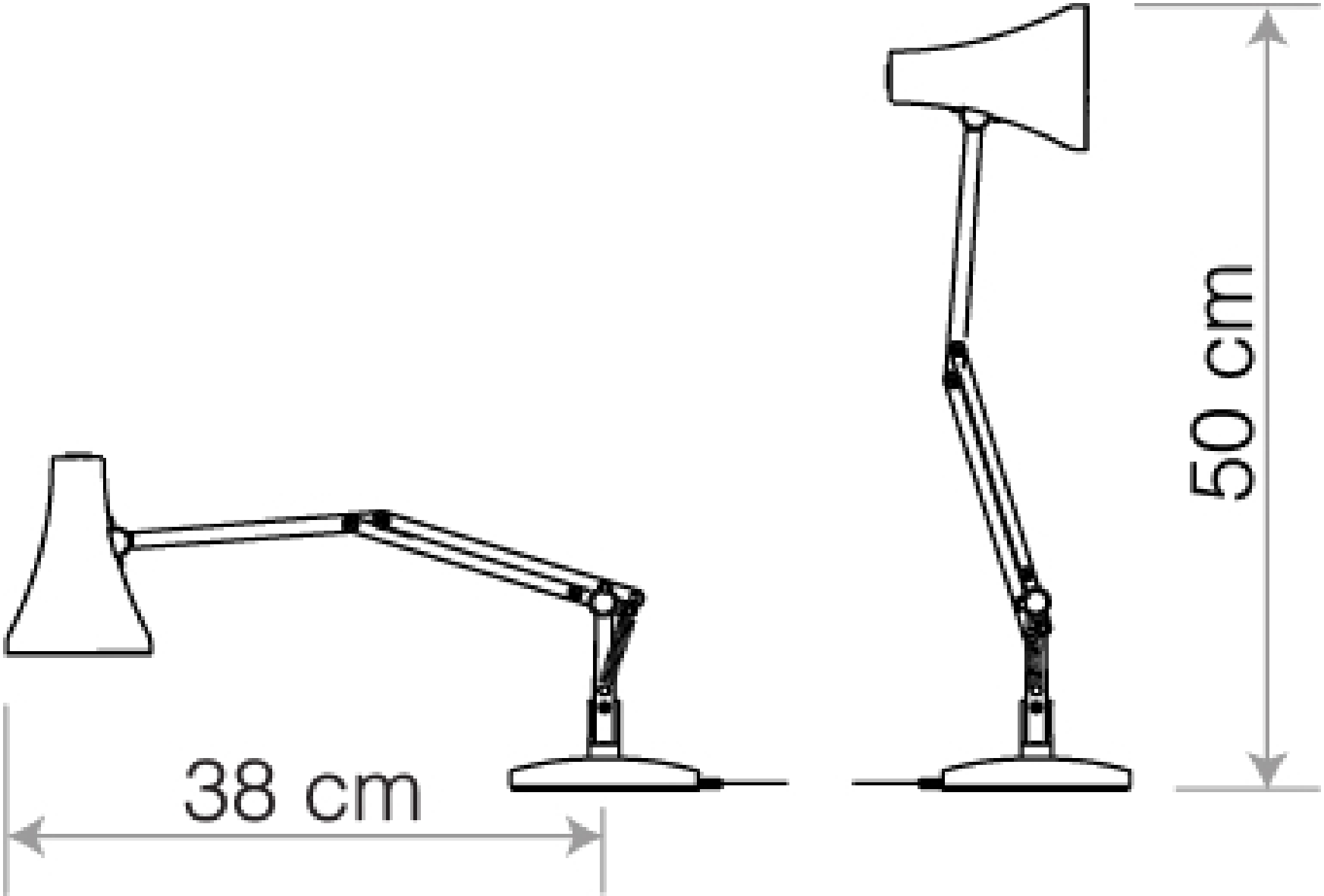
38 cm
50 cm