LOOM DESIGN

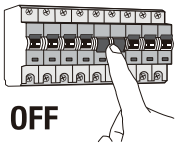

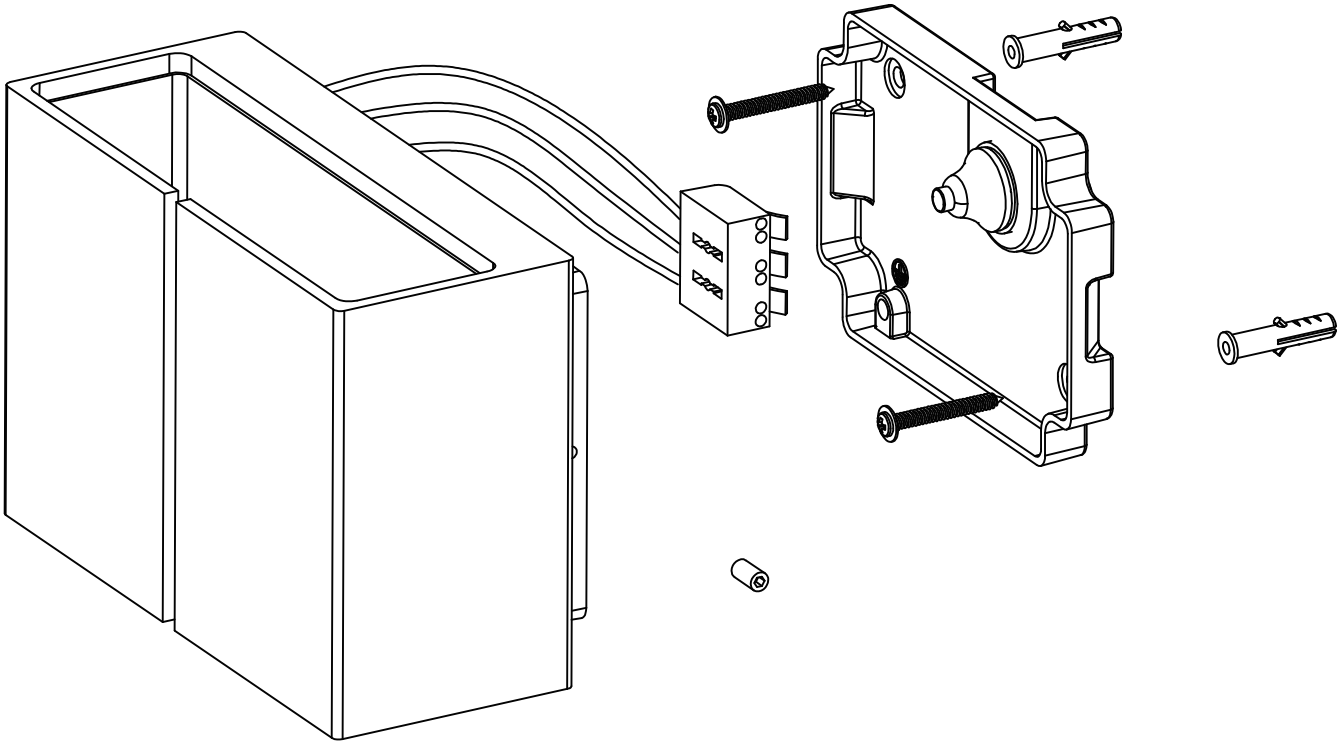

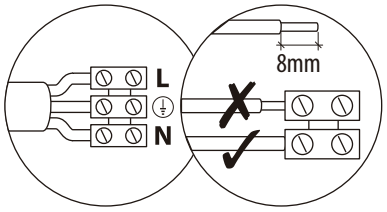

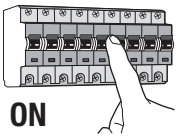

2400442300