WARM
NORDIC

Cone Wall Lamp

A classic wall light with charm and finesse designed in the 1950s by the internationally renowned lighting designer, Svend Aage Holm-Sørensen. With its fine, solid brass details, the Cone wall light looks elegant next to a sofa or an armchair, or in a bedroom. The shade on the slightly curved arm can be rotated in all directions to achieve precise, directional light exactly where you want it. The design of Cone is lent even more character by the architect's iconic light grooves along the edge of the metal shade, which also contribute to warm background lighting in a room.

Choose from several classic colours in Warm Nordic's exclusive silky matt quality paint, which guarantees an extraordinarily beautiful and durable surface.

Product name: Cone Wall Lamp
Designer: Svend Aage Holm-Sørensen
Design year: 1954
Furniture type: Wall Lamp
Launched: 2018

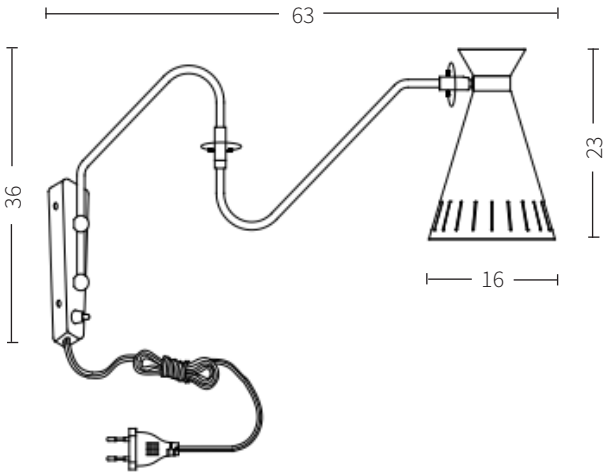

KEY FACTS

- Classic, timeless design
- Solid brass
- Curved design combined with sharp lines
- Elegant appearance
- Silky matt lacquer. Less susceptible to fingerprints

MATERIAL DETAILS

Shade and base:	Solid steel with silky matt lacquer. Solid brass.
Cord:	Textile.

DIMENSIONS

Diameter:	16 cm
Height:	36 cm
Weight:	1 kg
Cord length:	300 cm
Amount of packages:	1

COLOURS

Warm White
RAL 9002

Black Noir
RAL 9005

PACKAGING

Amount of packages: 1
Box dimensions: H48 x L41 x D20 – 0,0394 m^3
Box weight: 1,9 kg

SPECIFICATIONS

Cord colour: black noir, warm white
E27 max 25W
Energy A++-A
Voltage 220-240V
We recommend the use of LED bulb
Assembly required.

ENVIRONMENT

High quality materials for high durability.
The lamp does not exceed the limits described by the EU in REACH, which protects people and the environment against the risks posed by chemicals.
The lamp is shipped with sustainable Mærsk ECO fuel ships that use green fuels instead of fossil fuels, which ensures responsible transport.
When disposed of, the lamp can be separated into several different parts to make the sorting of waste easier.
Recycling of materials is possible.
The lamp is WEEE-registered, so it is possible to reuse and recycle the electrical parts of the lamp.
All packaging material can be recycled.