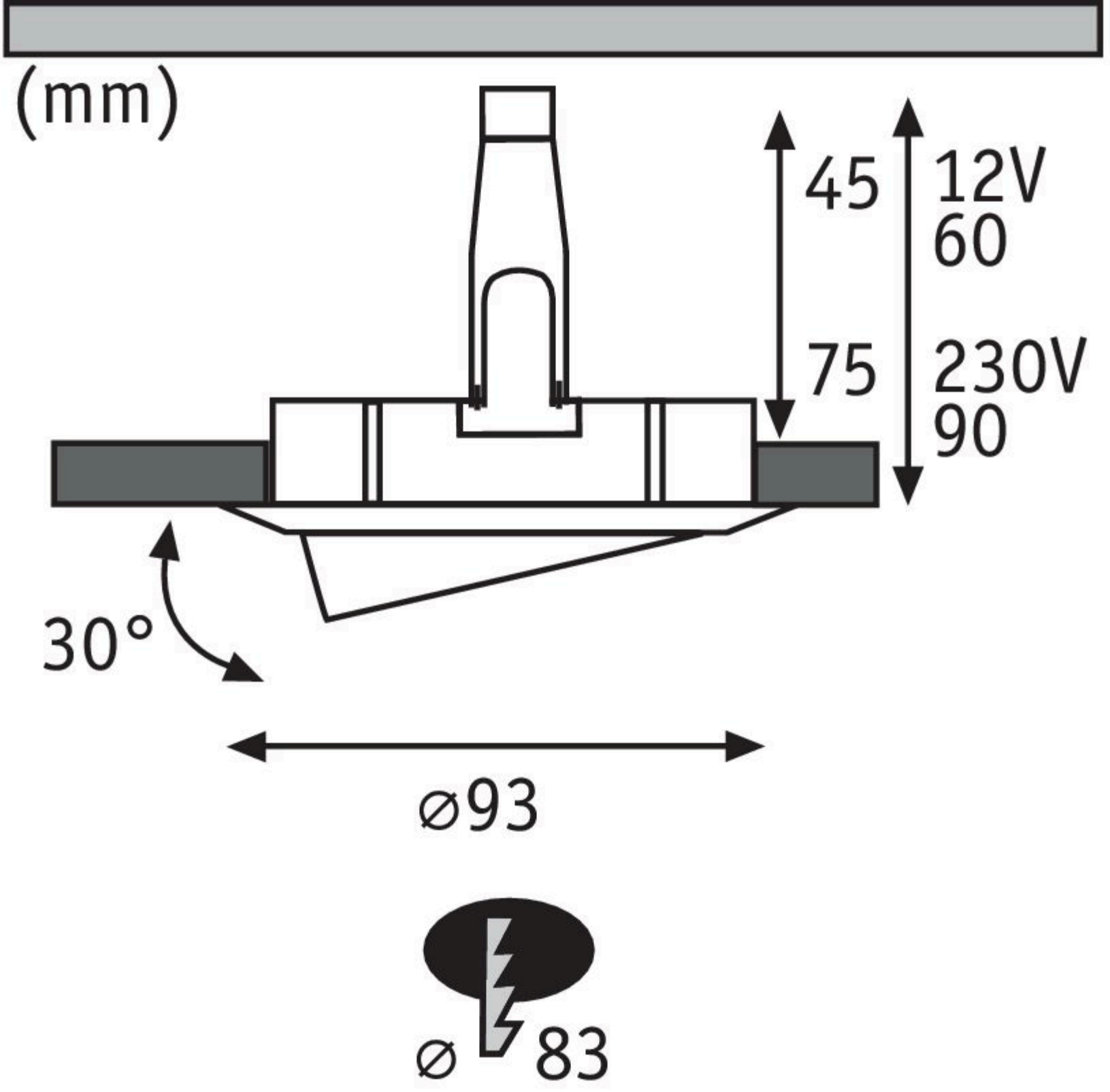
(mm)
45
12V
60
75
230V
90
30°
⌀93
⌀ 83