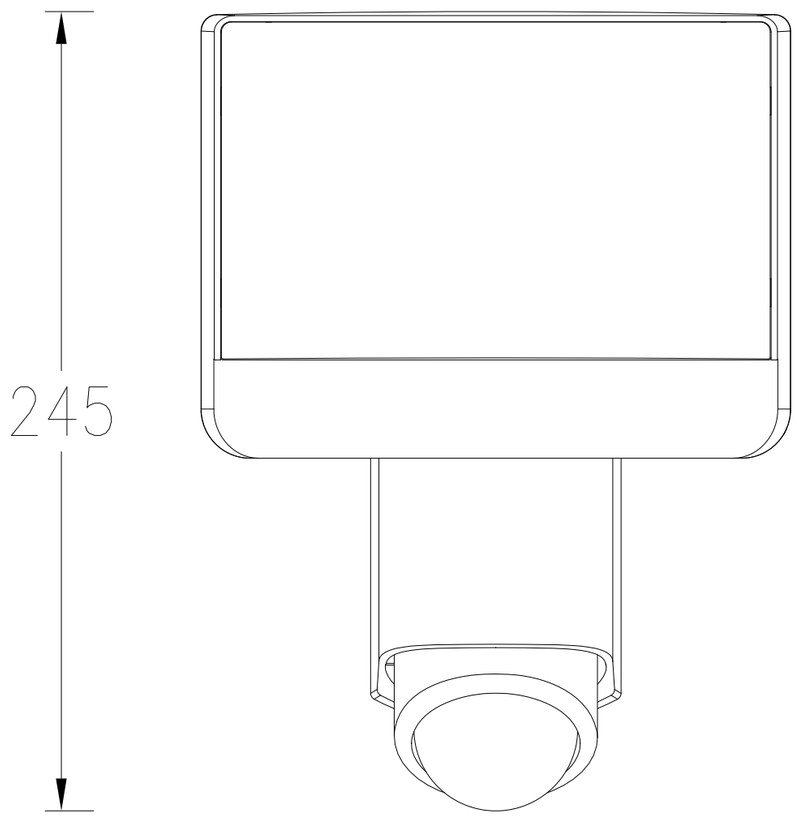
180
245

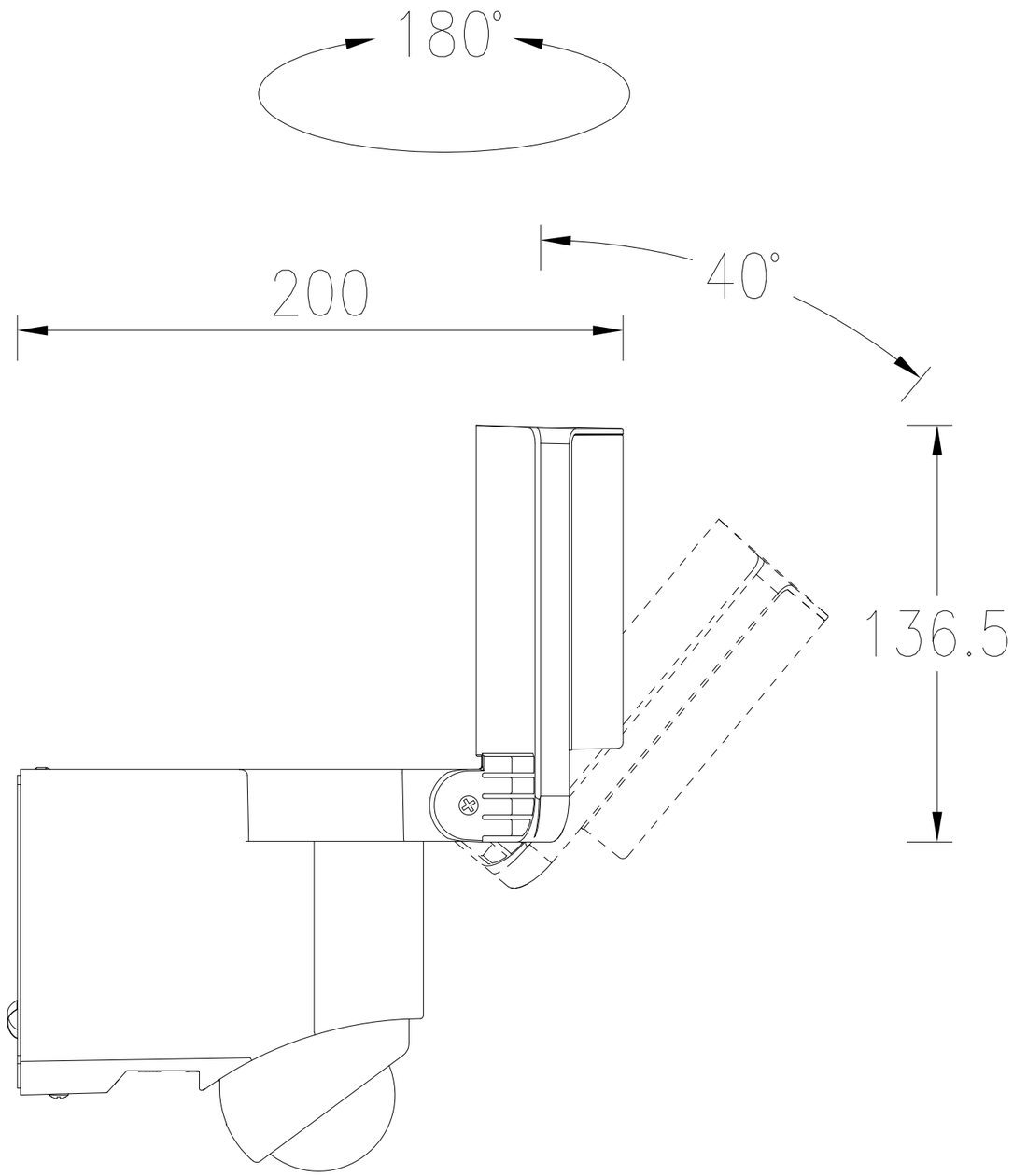
180°
200
40°
136.5