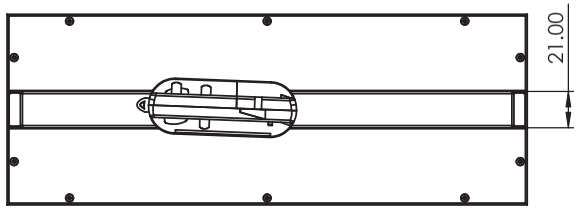
21.00

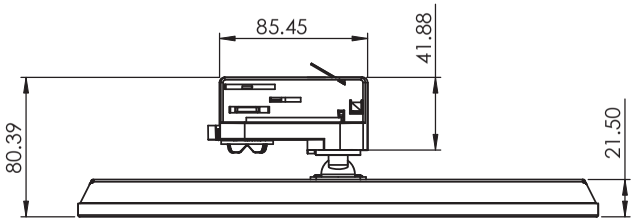
85.45
41.88
80.39
21.50

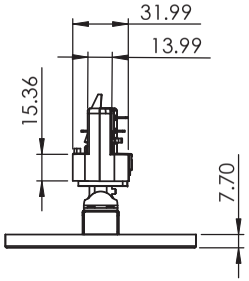
31.99
13.99
15.36
7.70

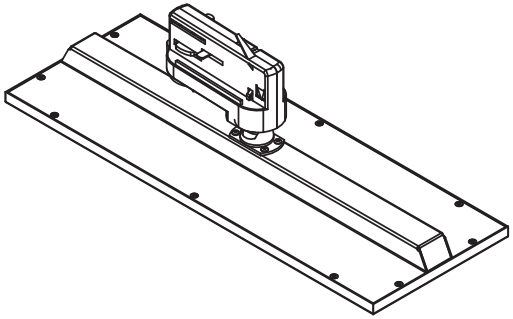

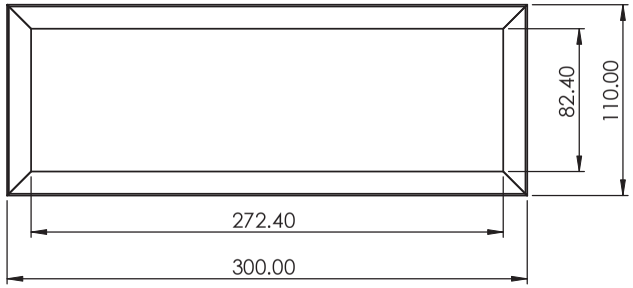
82.40
110.00
272.40
300.00