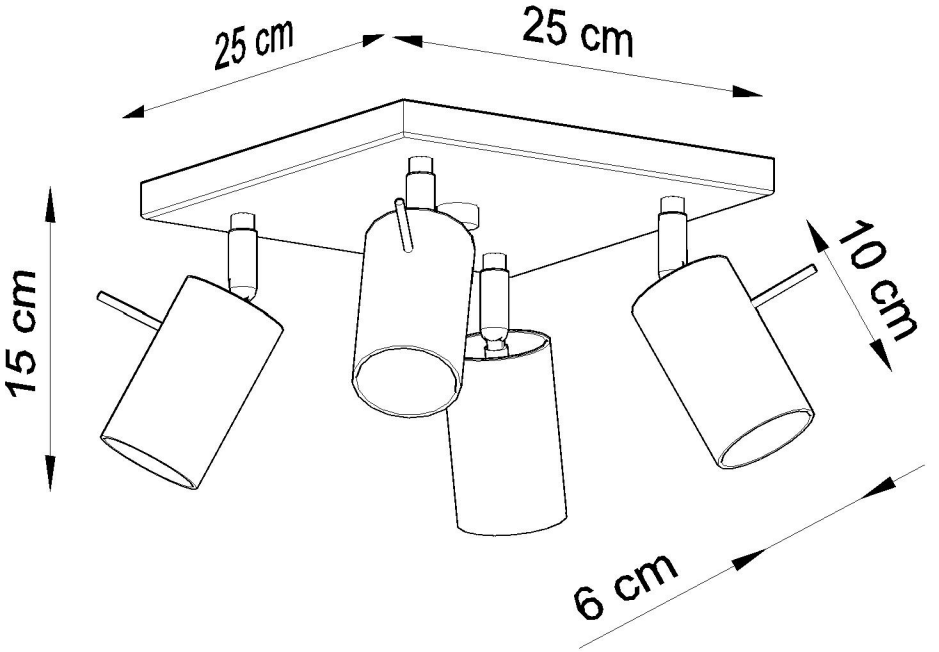
25 cm
25 cm
15 cm
10 cm
6 cm