IZMIR HANGING LAMP

(IZMIR/H6/B)

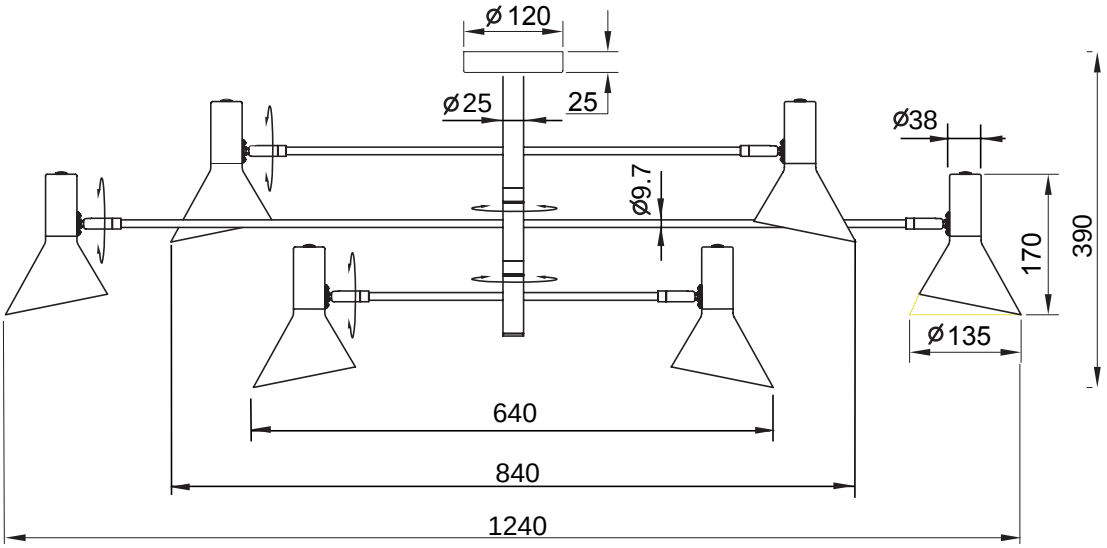

SIZE: 1240mm L X 840mm W X 390mm H
E14, 6 X Max. 25W or 6 X 5W CFL

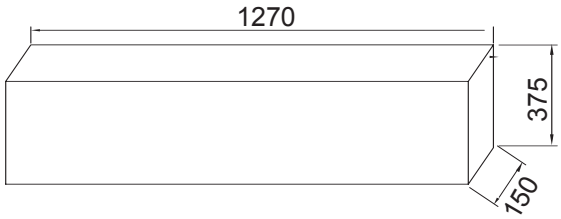

PACKING DETAILS

Box sizes: 1270x150x375 mm
Total cbm: 0.071
G.W.: 3.9 KGS
N.W.: 2.2 KGS
Number of boxes: 1PCS