searchlight

13323-5GO

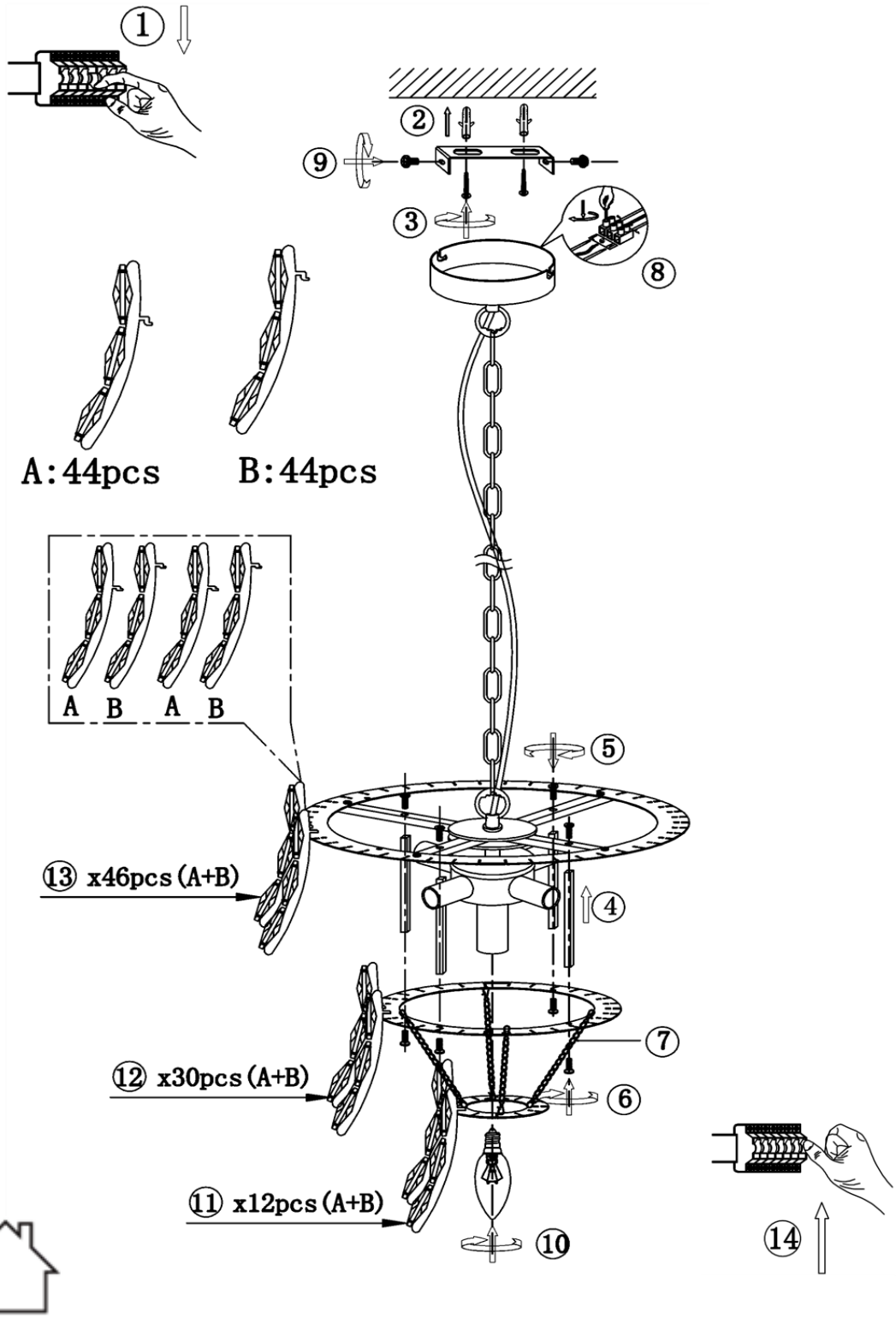

DIMMABLE

Q.C APPROVED 19/06/2026 Issue 1

MAINS SUPPLY		LIGHT FITTING
LIVE - Possible colours : Red or Brown		LIVE
EARTH - Un sleeved copper or (Green / Yellow)		EARTH
NEUTRAL - Possible colours : Black or Blue		NEUTRAL