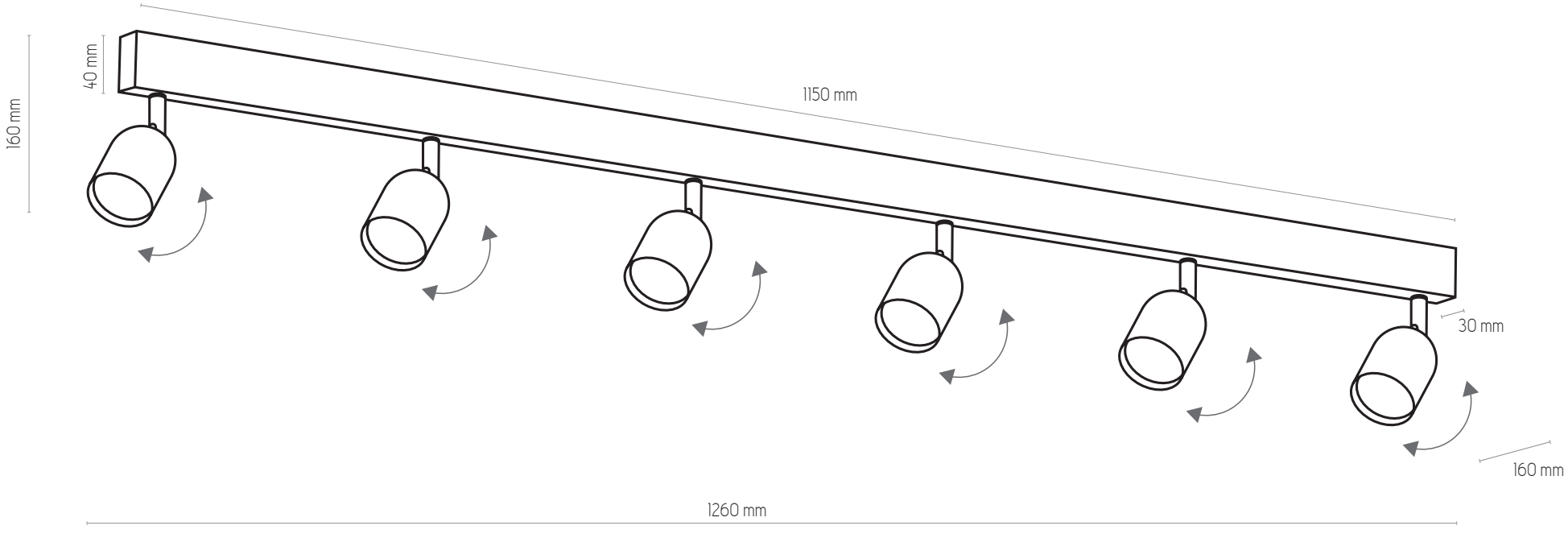
40 mm
160 mm
1150 mm
30 mm
160 mm
1260 mm