MAYTONI
DECORATIVE LIGHTING

Instruction

DIA700-CL-12-G

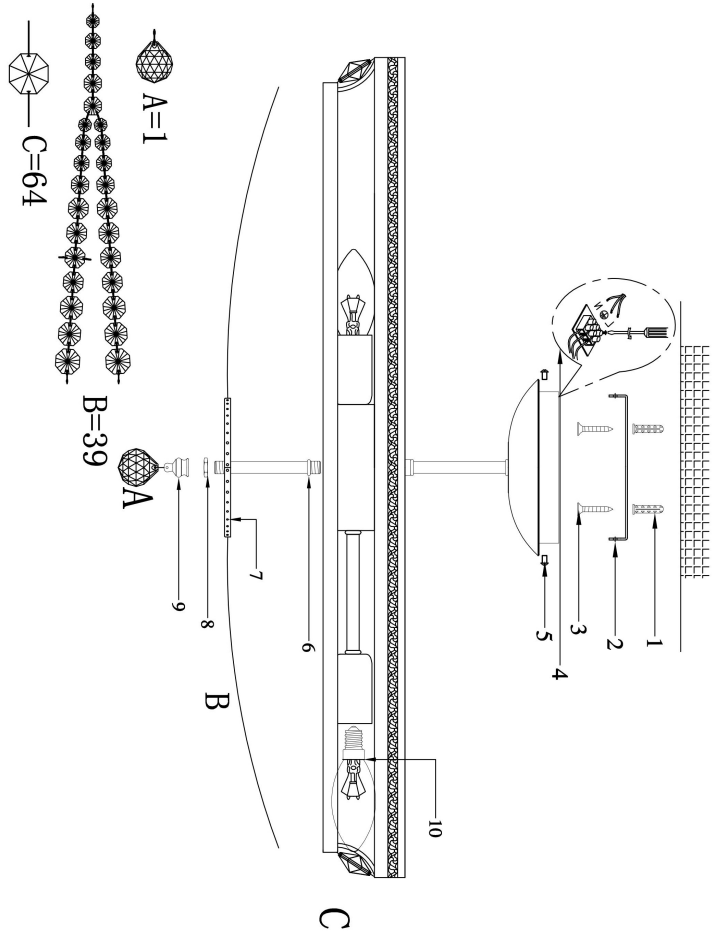

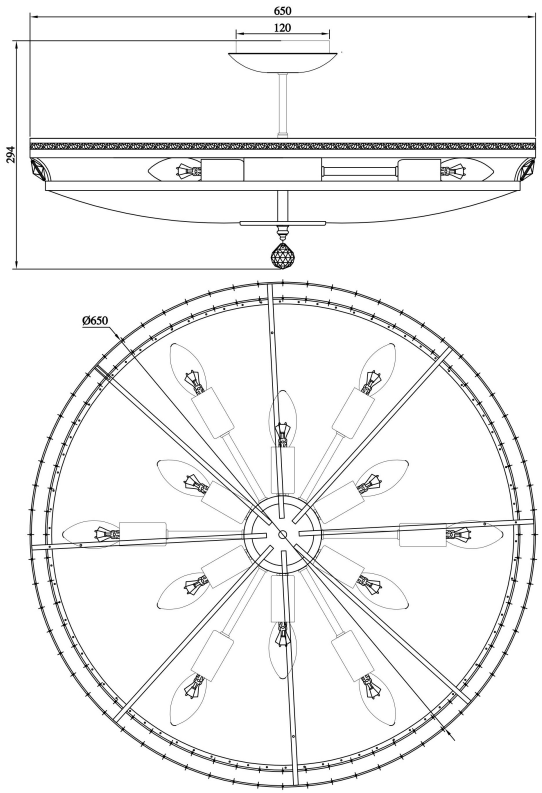

12xE14 60W

Model: DIA700-CL-12-G

Collection: Royal Classic

Series: Ottilia

Pendant Lamps

This product contains a light source of energy efficiency class