searchlight

ASSEMBLY INSTRUCTIONS
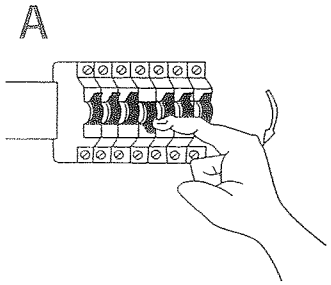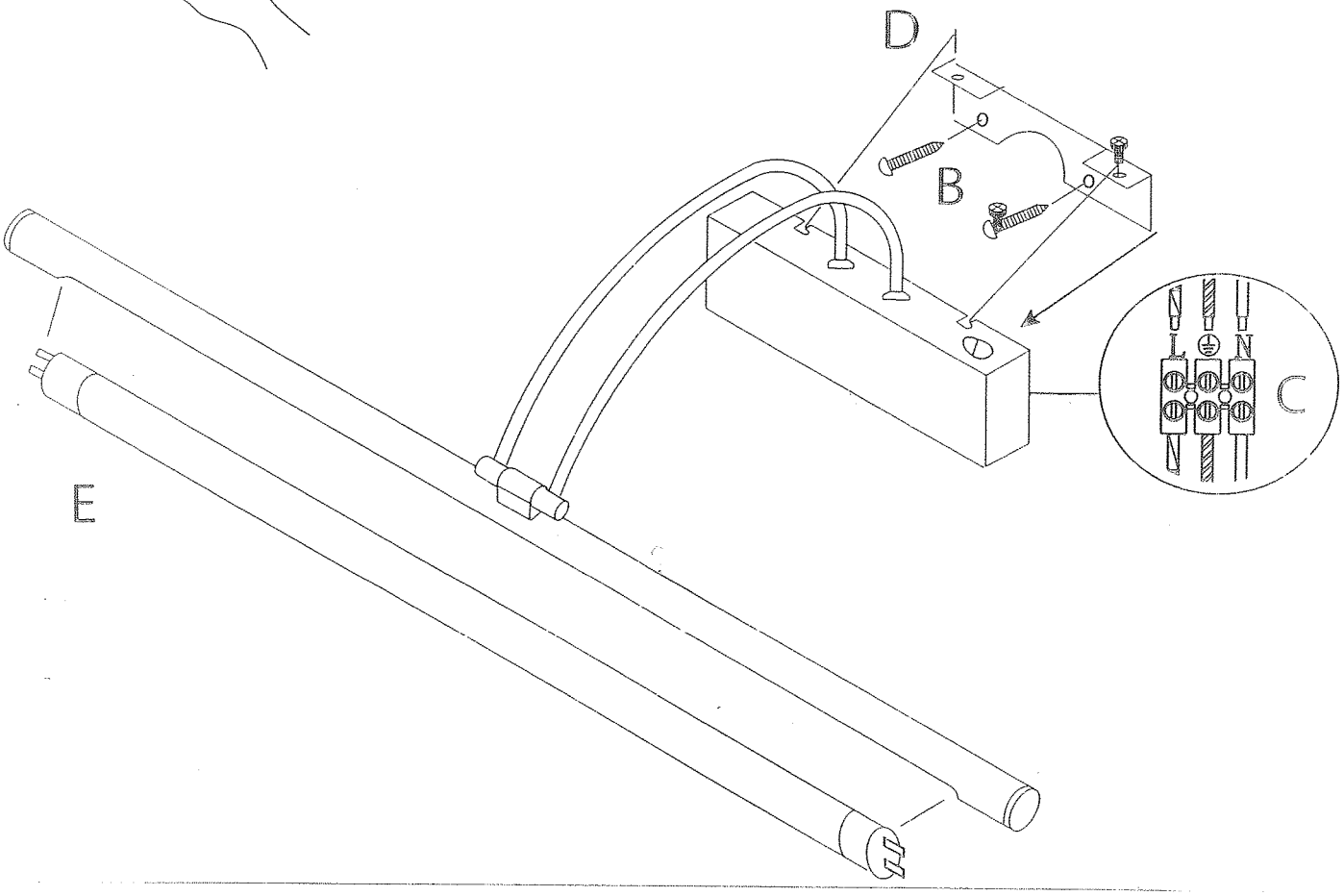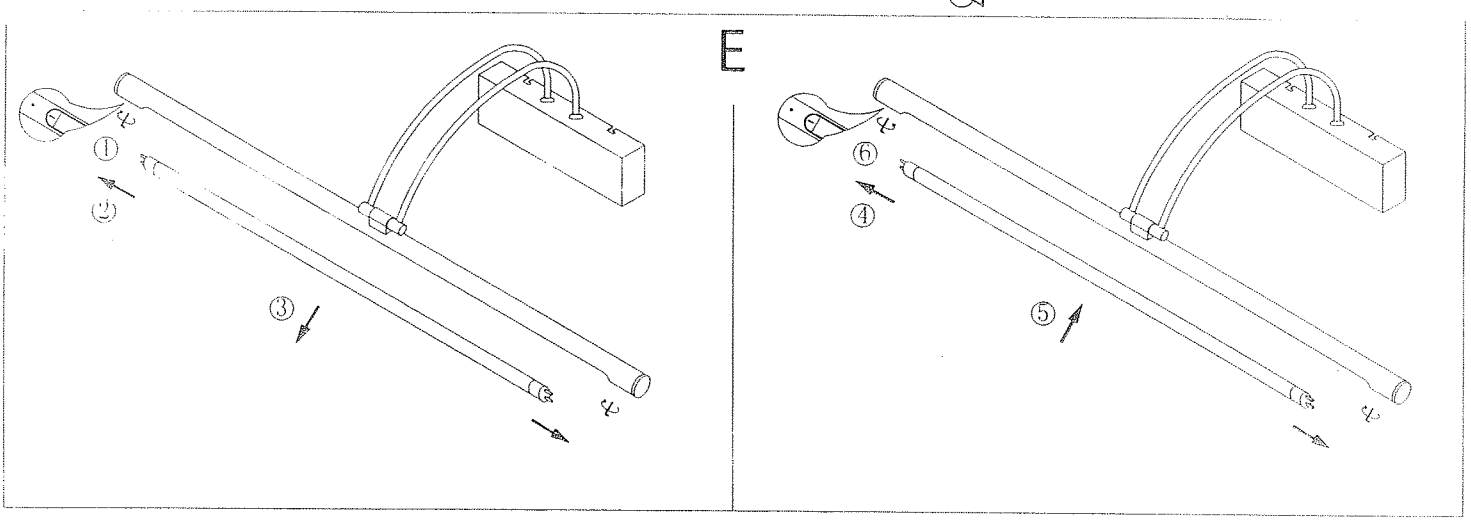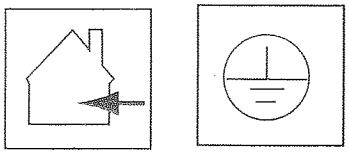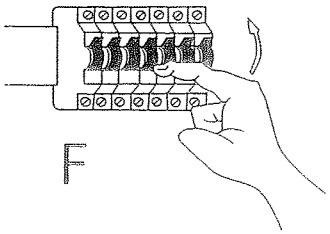
8343
QL00522