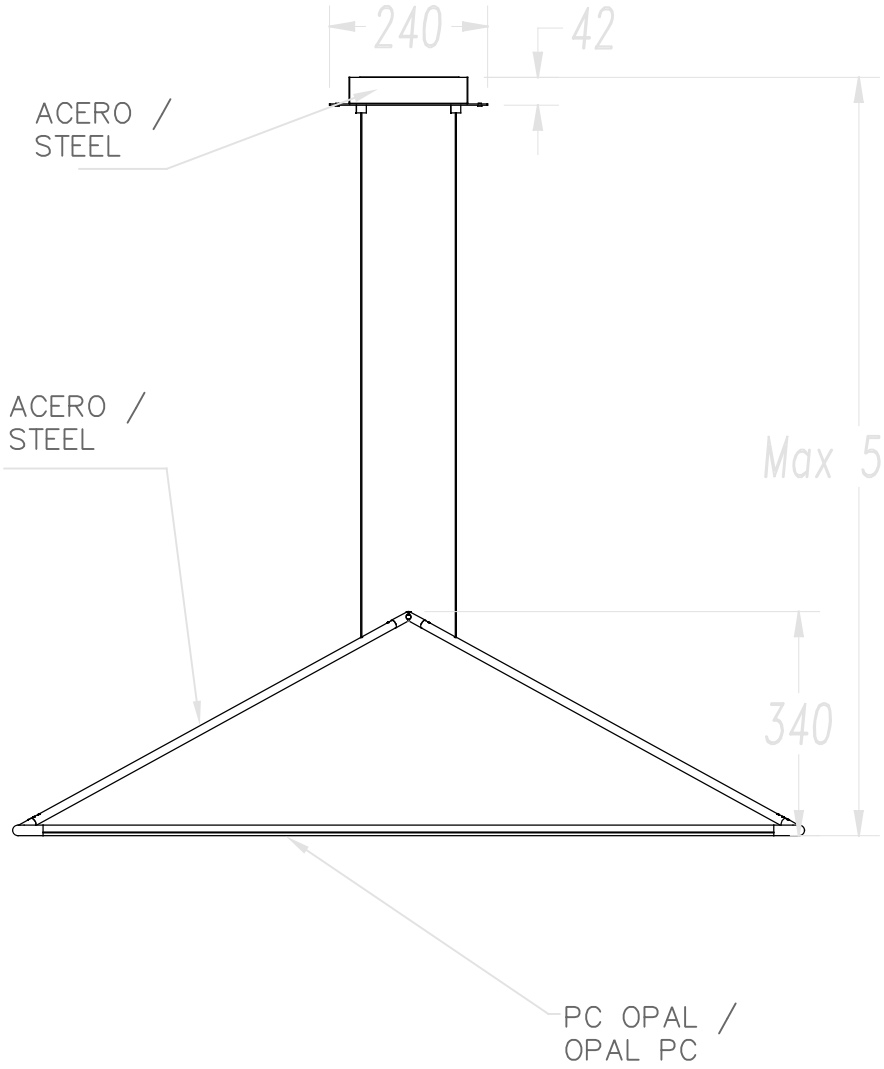
240
42
ACERO /
STEEL
ACERO /
STEEL
Max 5000
340
PC OPAL /
OPAL PC

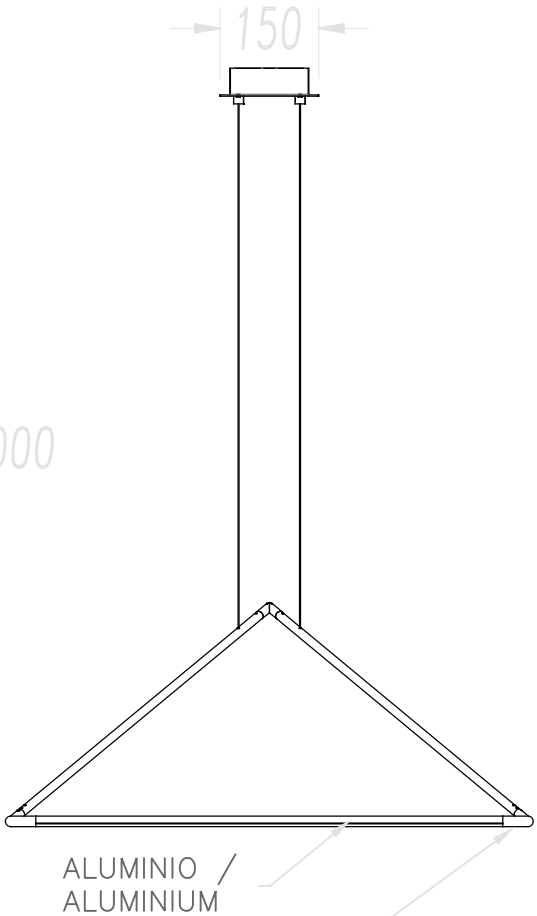
150
ALUMINIO /
ALUMINIUM
ZAMAK /
ZINK ALLOY

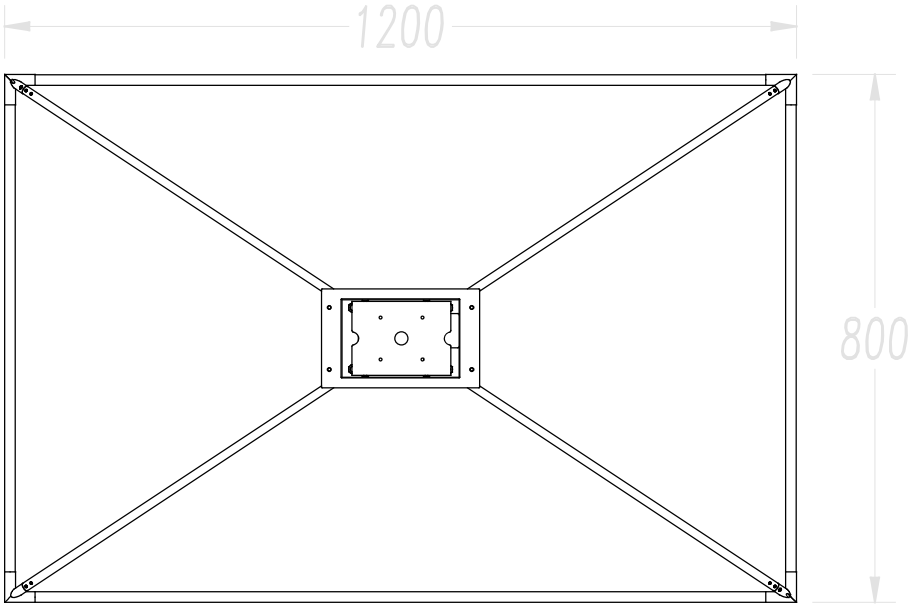
1200
800

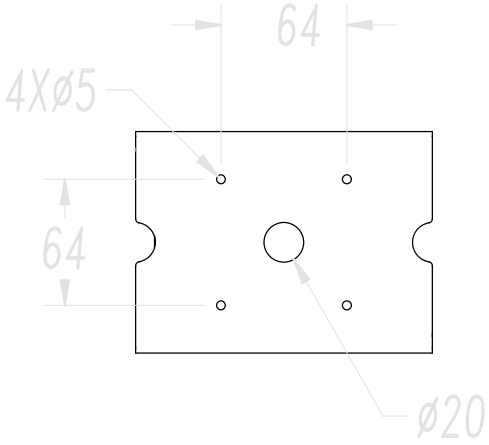
64
4Xø5
64
ø20

20/12/16