ROBY
CEILING SURFACE

28-Jun-2019

1.6
LED 13W | 220-240VAC | 50-60Hz | AC-PCB 3-step low flicker | phase cut dim
CE IP44 0,3m

white texture	135184W_
Black texture	135184B_

LIGHT COLOUR

2700K | >90CRI | 750lm	3
3000K | >90CRI | 820lm	5

2.6
LED 18W | 220-240VAC | 50-60Hz | AC-PCB 3-step low flicker | phase cut dim
CE IP44 0,3m

white texture	135284W_
Black texture	135284B_

LIGHT COLOUR

2700K | >90CRI | 1130lm	3
3000K | >90CRI | 1250lm	5

3.5
LED 32W | 220-240VAC | 50-60Hz | AC-PCB 3-step low flicker | phase cut dim
CE IP44 0,3m

white texture	135384W_
Black texture	135384B_

LIGHT COLOUR

2700K | >90CRI | 1680lm	3
3000K | >90CRI | 1800lm	5

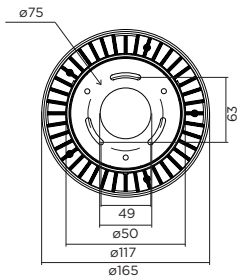

ROBY 1.6

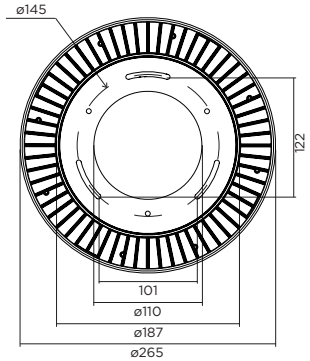

ROBY 2.6

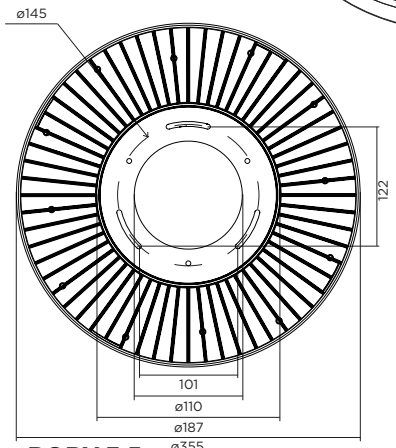

ROBY 3.5

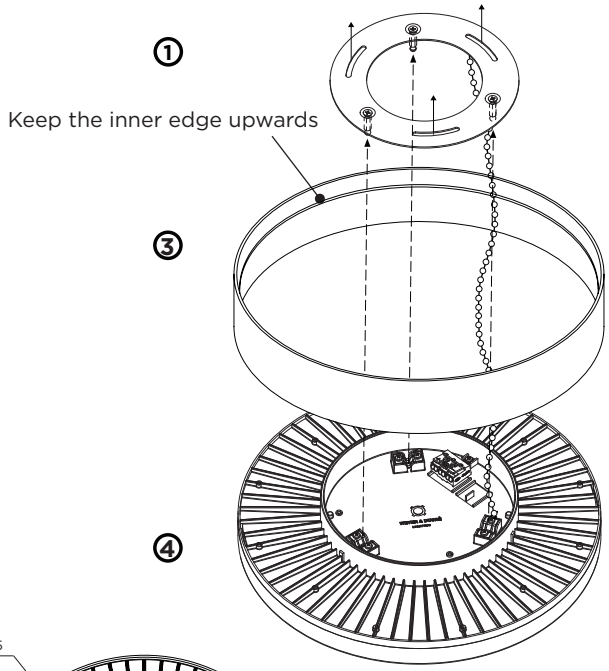

ROBY 2.6 & ROBY 3.5 have the same base plate mounted.

DIMENSIONS

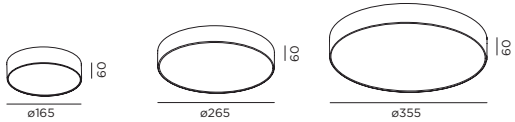

MOUNTING INSTRUCTION

① Remove the base plate from the ROBY and mount it on the ceiling with screws. Also disconnect the fall protection. ROBY 2.6 and ROBY 3.5 have the same base plate.

POWER CONNECTION

② Interior connection: STANDARD version

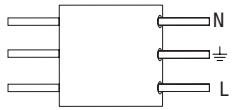

③ Put the ROBY cover on top of the fixture before clicking it on the base plate

④ Connect the fall protection back to the base plate.Then attach the ROBY to the base plate by clicking the 3 fore-seen pins into the holes

The light source of the integrated LED is not replaceable; When the light source reaches its end of life the whole luminaire should be replaced.

Caution, risk of electric shock

PB19-010-628-00

WEVER & DUCRÉ LIGHTING

www.weverducre.com

Wever & Ducre bvba Spinnerijstraat 99/21 8500 Kortrijk

INSTALLATION INSTRUCTIONS