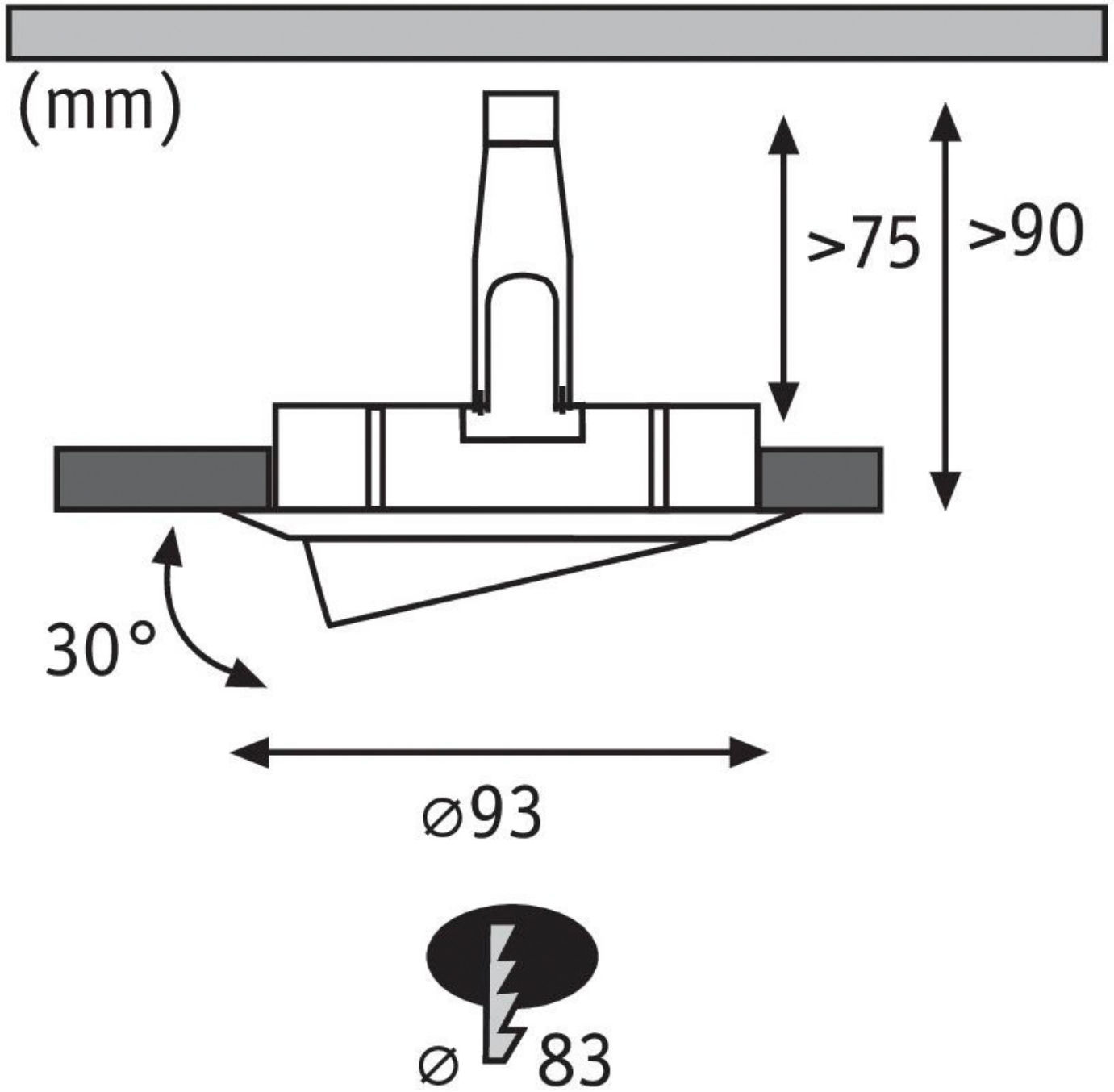
(mm)
>75
>90
30°
⌀93
⌀ 83