ARCCHIO

Art.-No.: 9939025

incl. LED L9002570
15730 lm Modul
5600lm Lamp
111,6W LED
120W Total
230V~50Hz
3000K
CRI 80
30000 h
25000 ON/ OFF

IP20

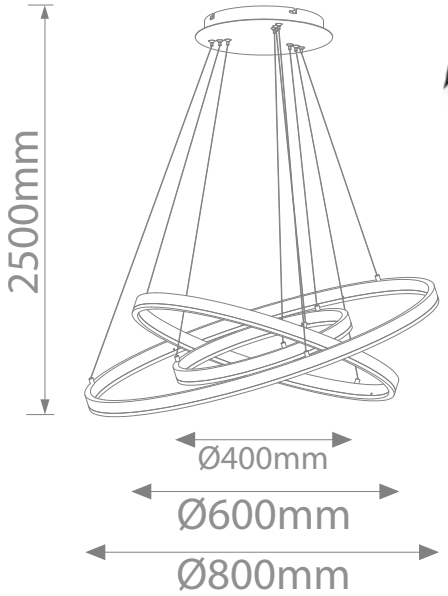

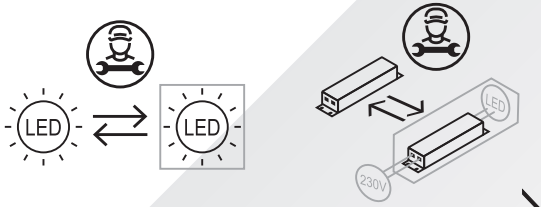

4 251096 597691

LUQOM Holding GmbH · Rabanusstraße 16 D-36037 Fulda · www.arcchio.eu