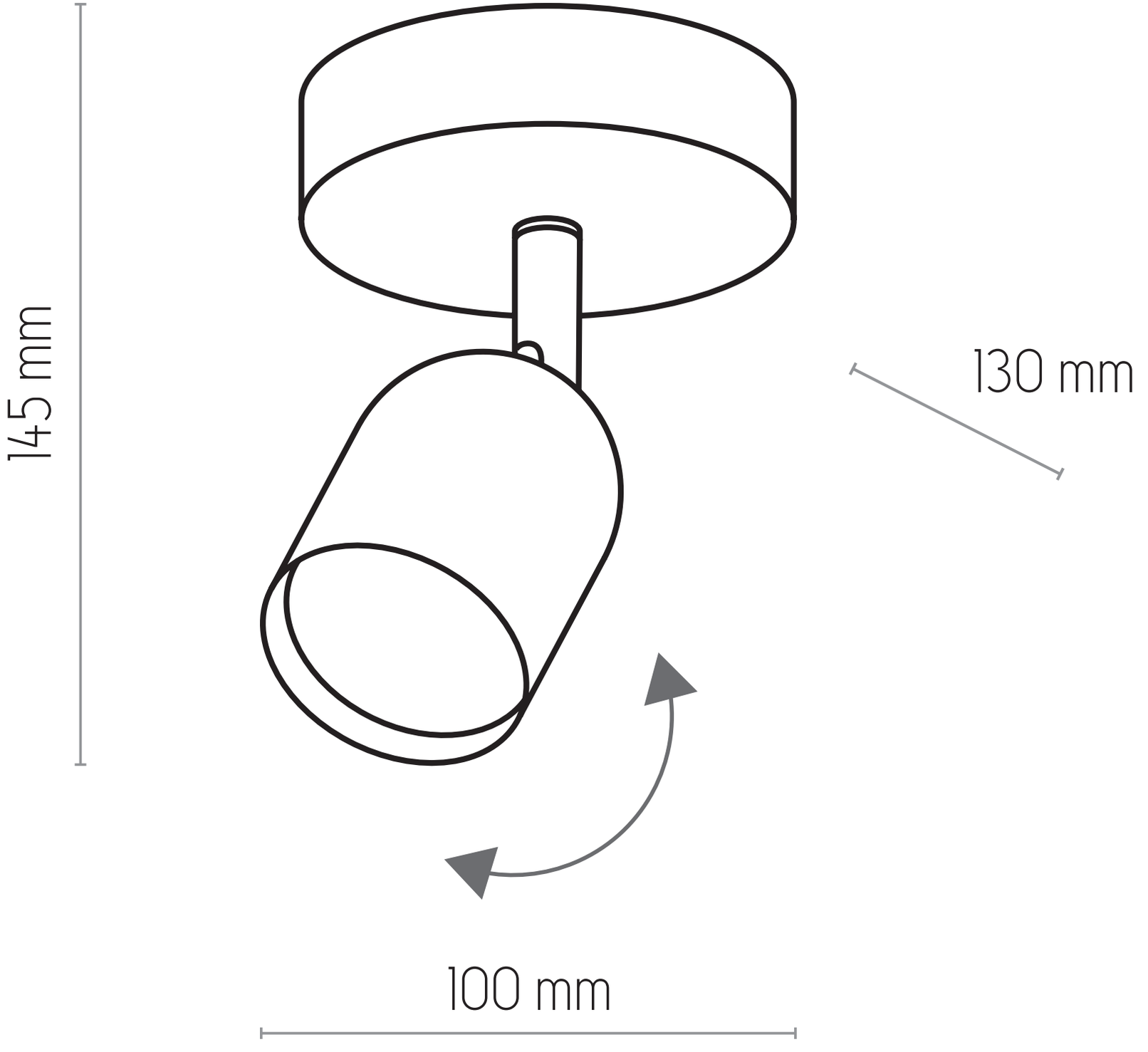
145 mm
130 mm
100 mm