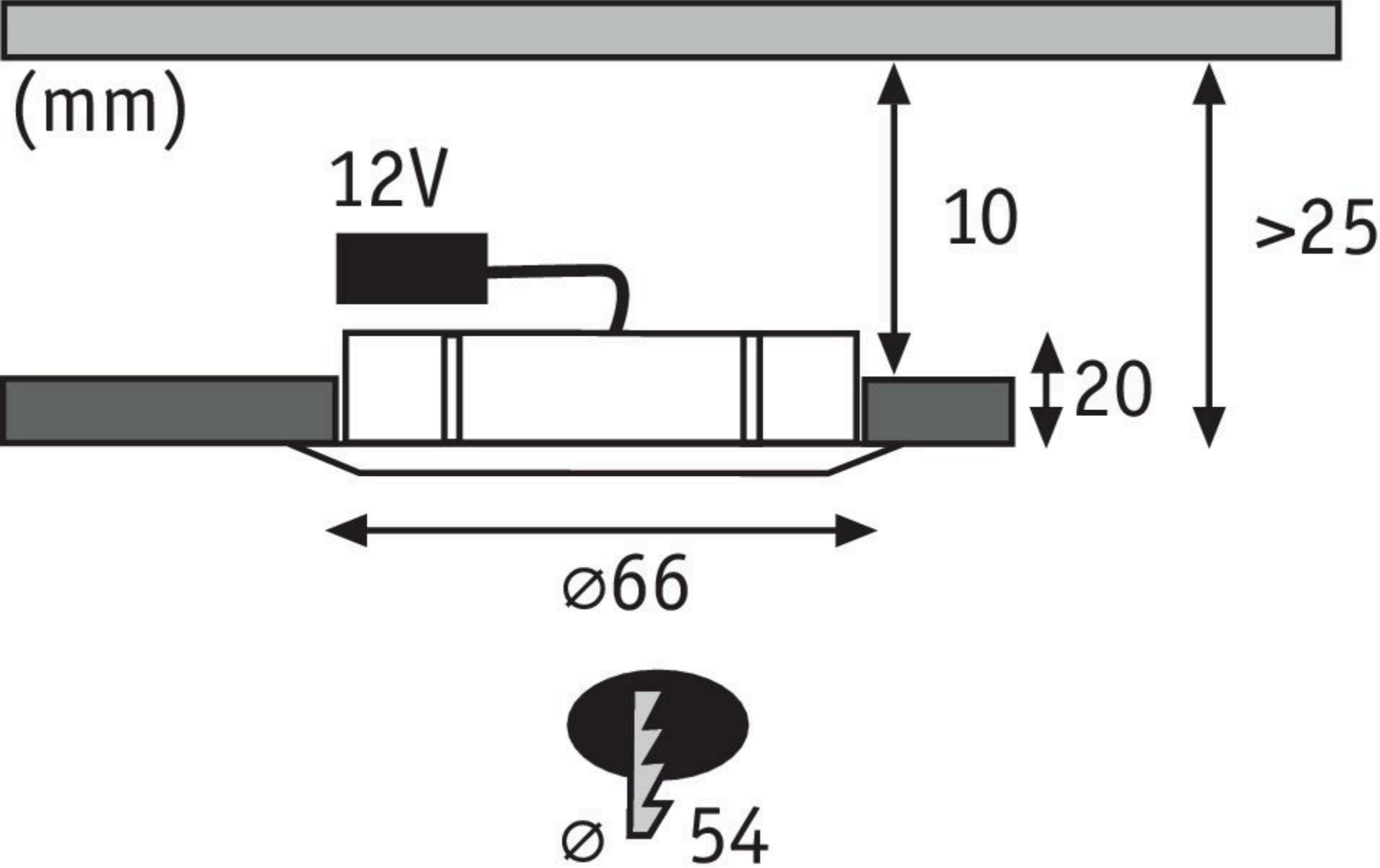
(mm)
12V
10
>25
20
⌀66
⌀
54