LANTAU

Ref #33370, 33373, 33516

Category: FAN
Subcategory: Large

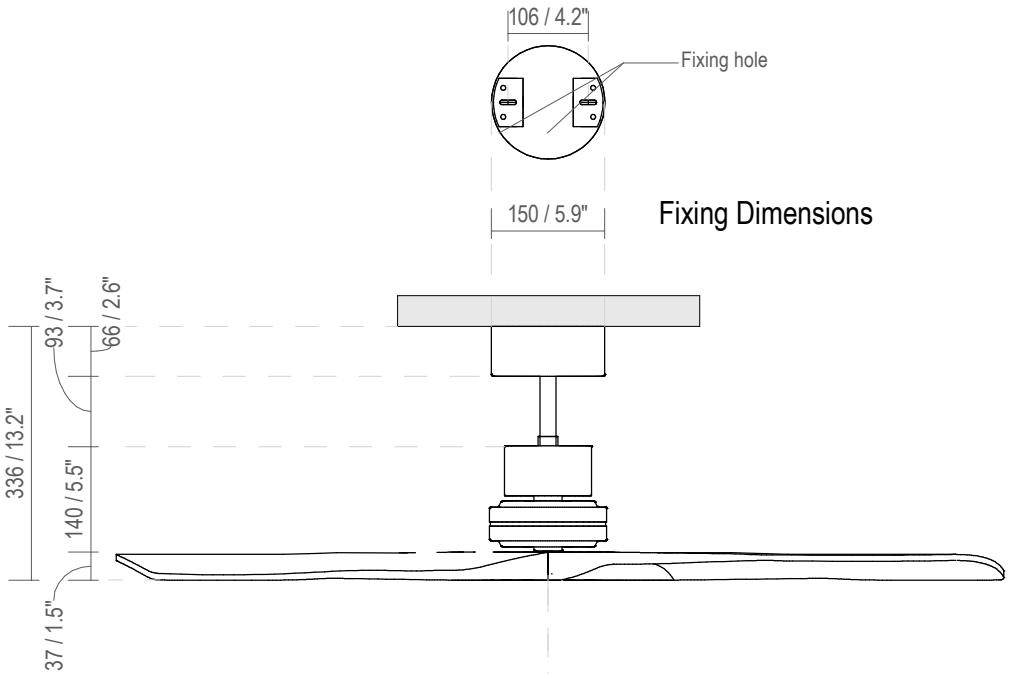

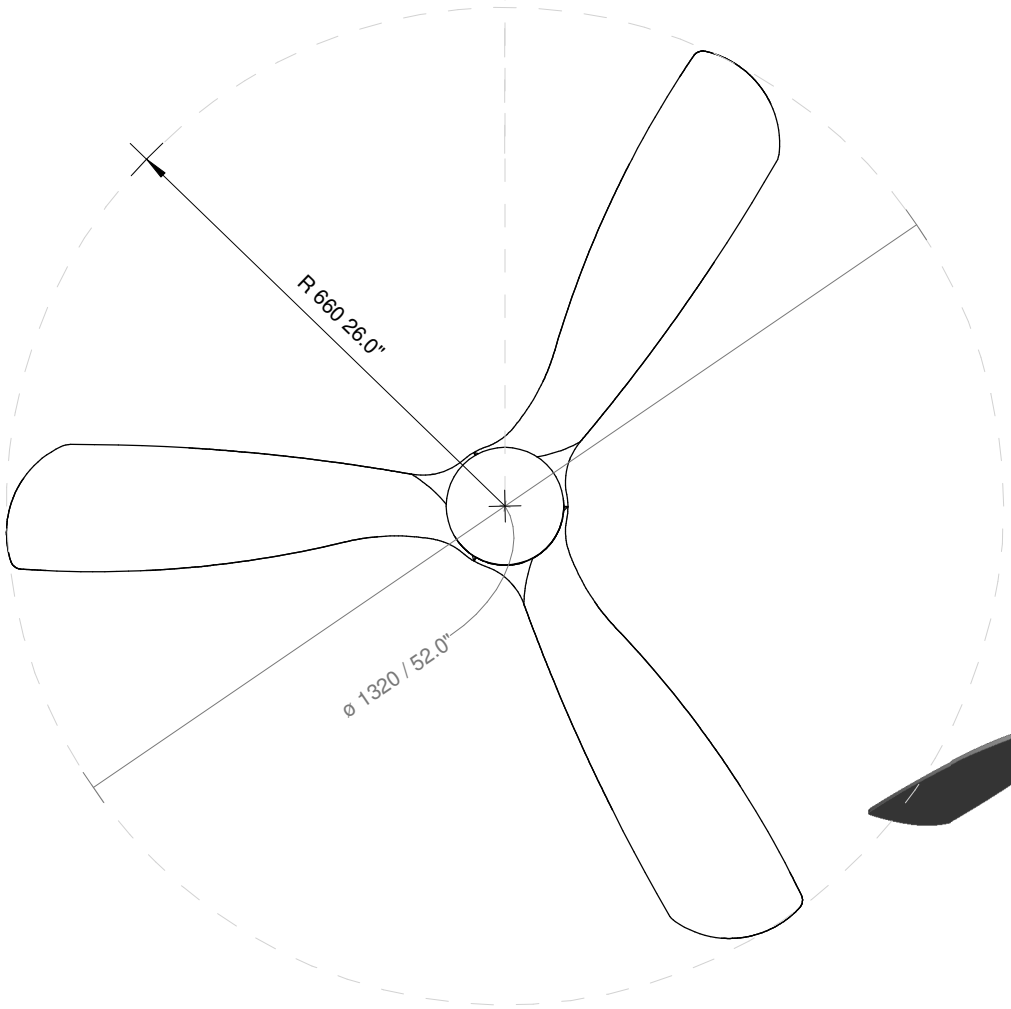

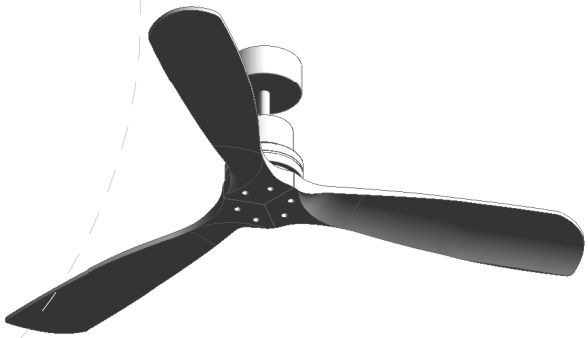

Units: mm / Inch
Actualization Date 25/08/2020