# AL 11K/82506

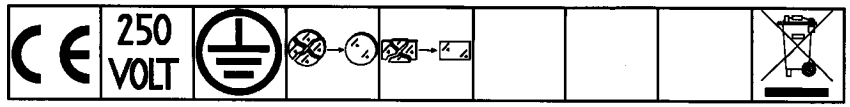
250
VOLT

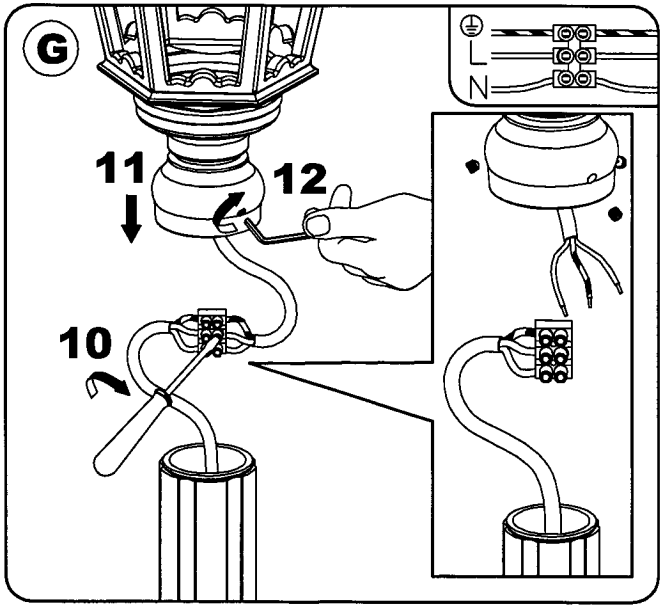
G
11
12
10
L
N

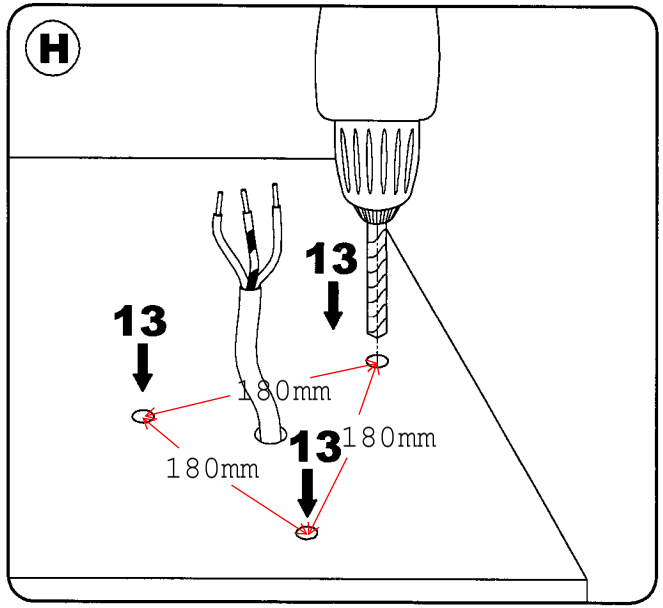
H
13
13
13
180mm
180mm
180mm

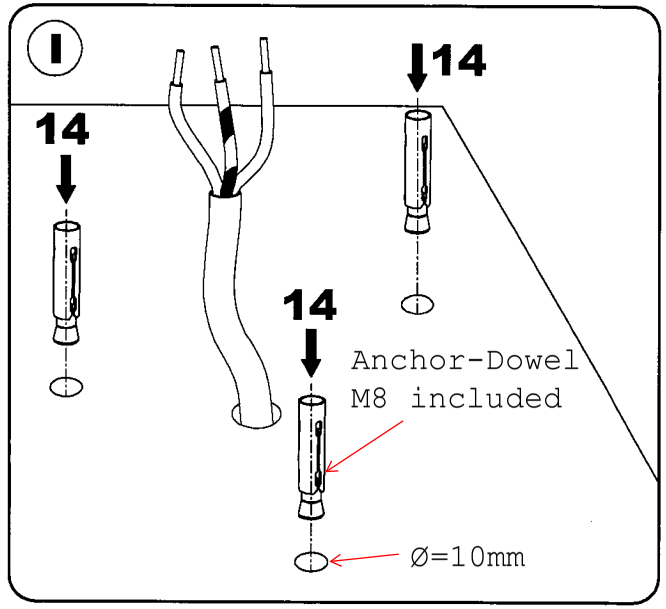
I
14
14
14
Anchor-Dowel
M8 included
Ø=10mm

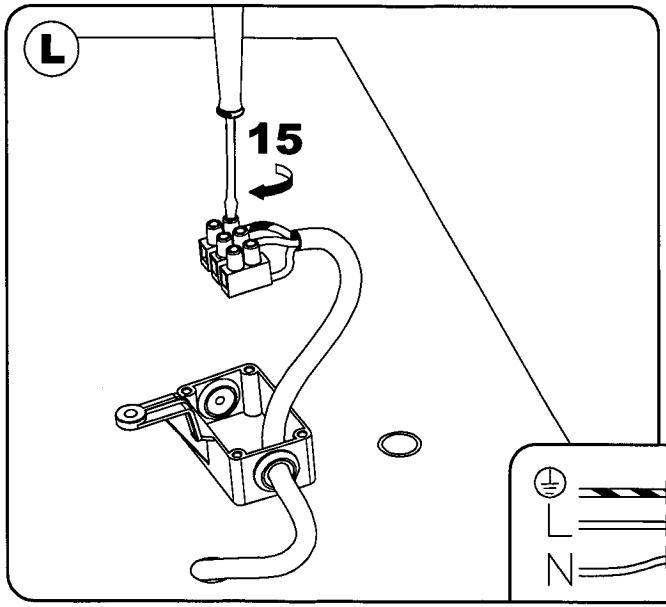
L
15
L
N

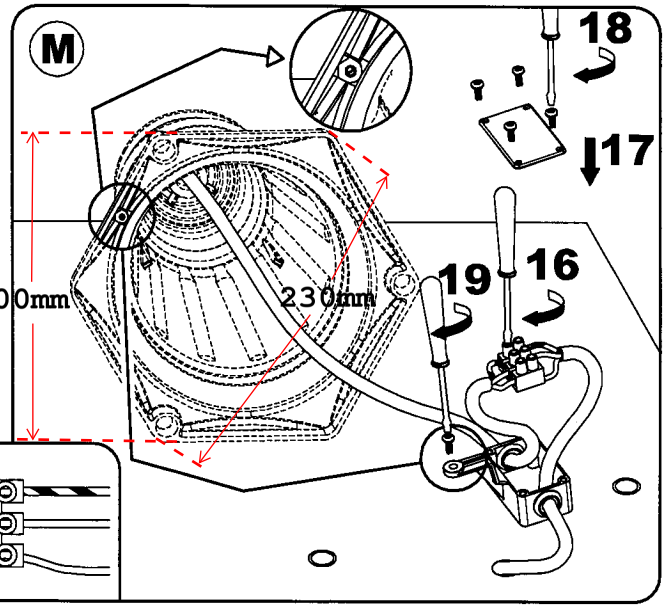
M
18
17
19
16
200mm
230mm

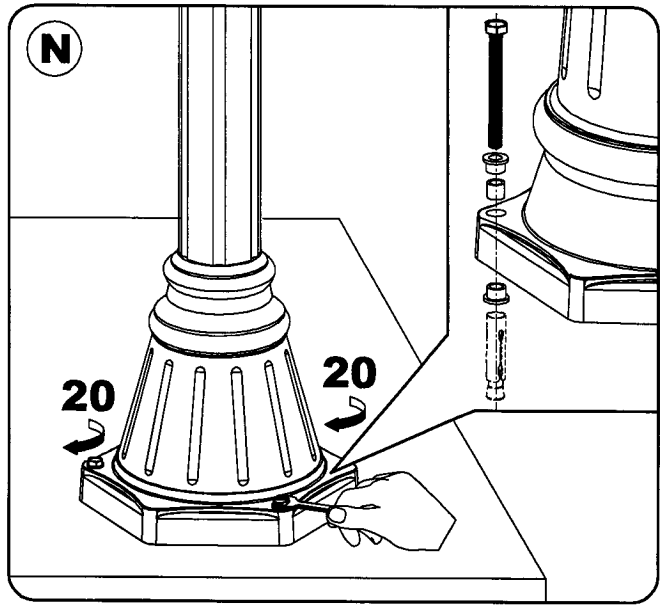
N
20
20
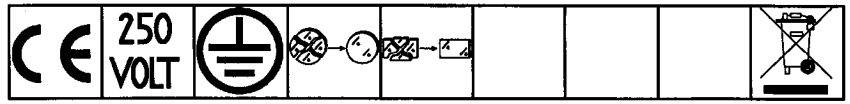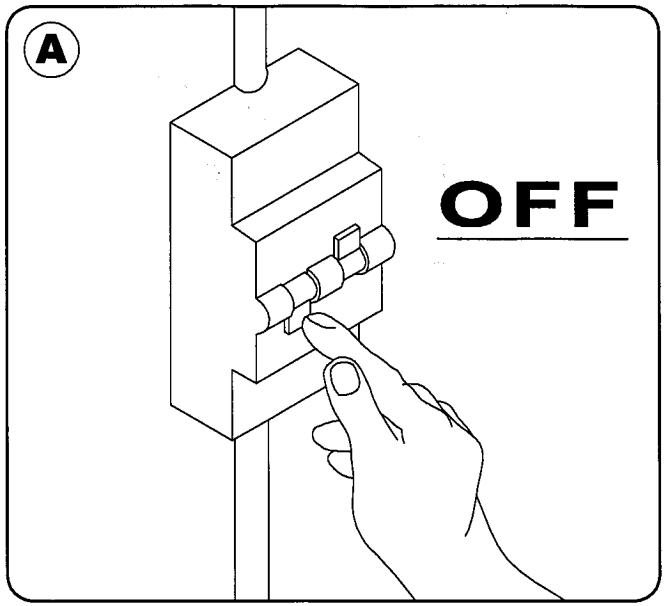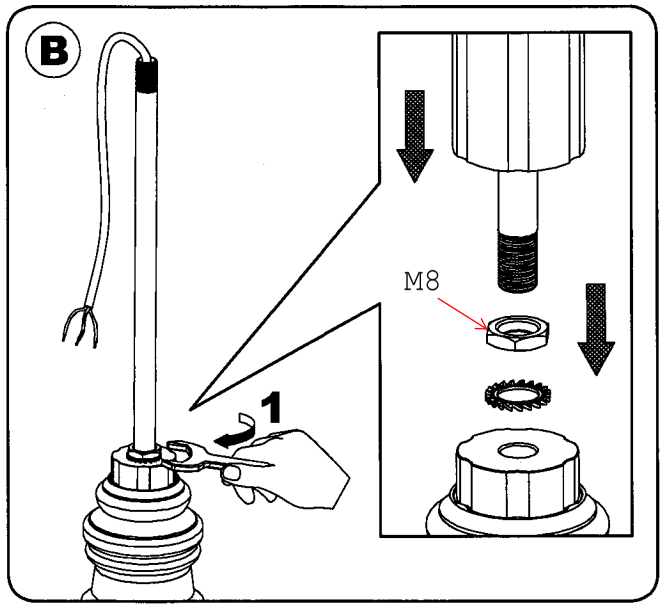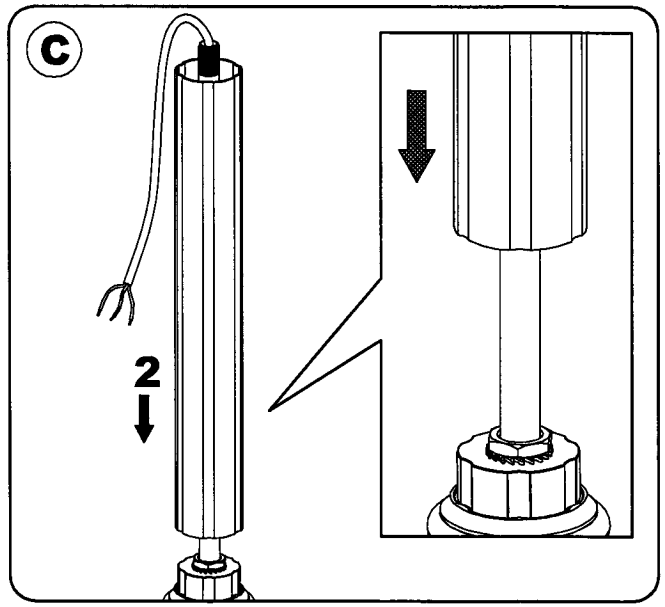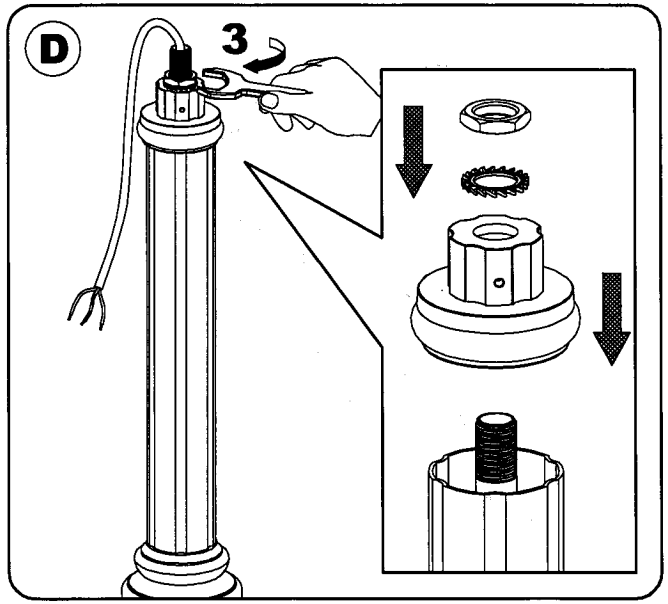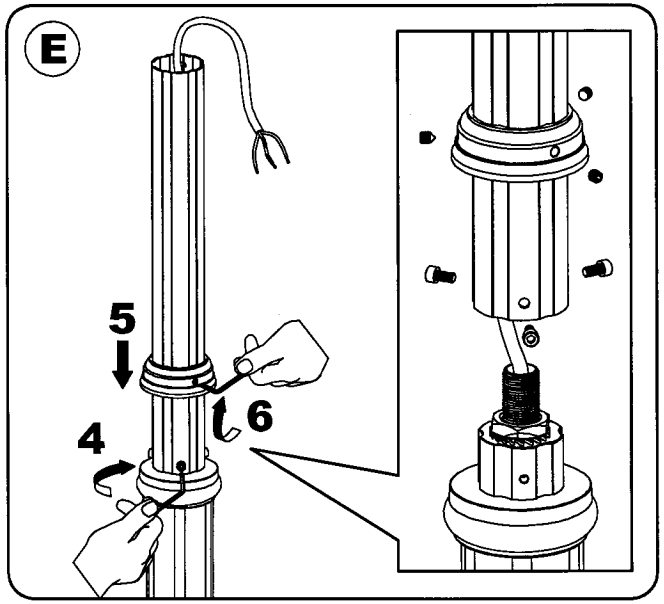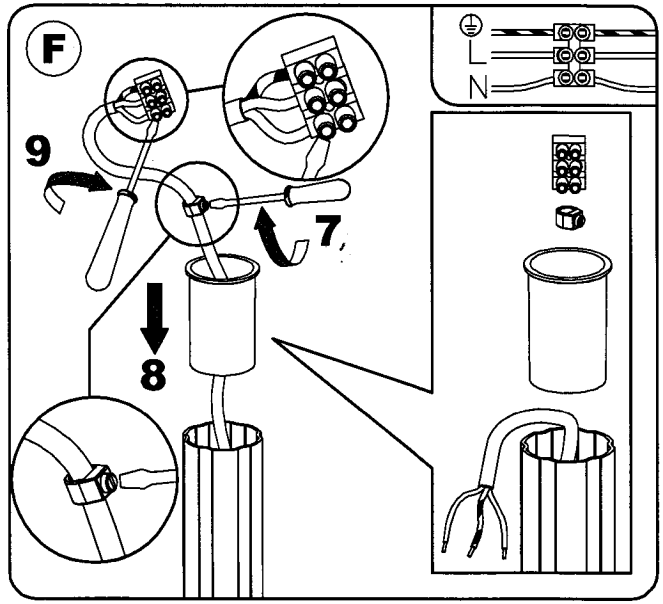
# AL 11K/82506