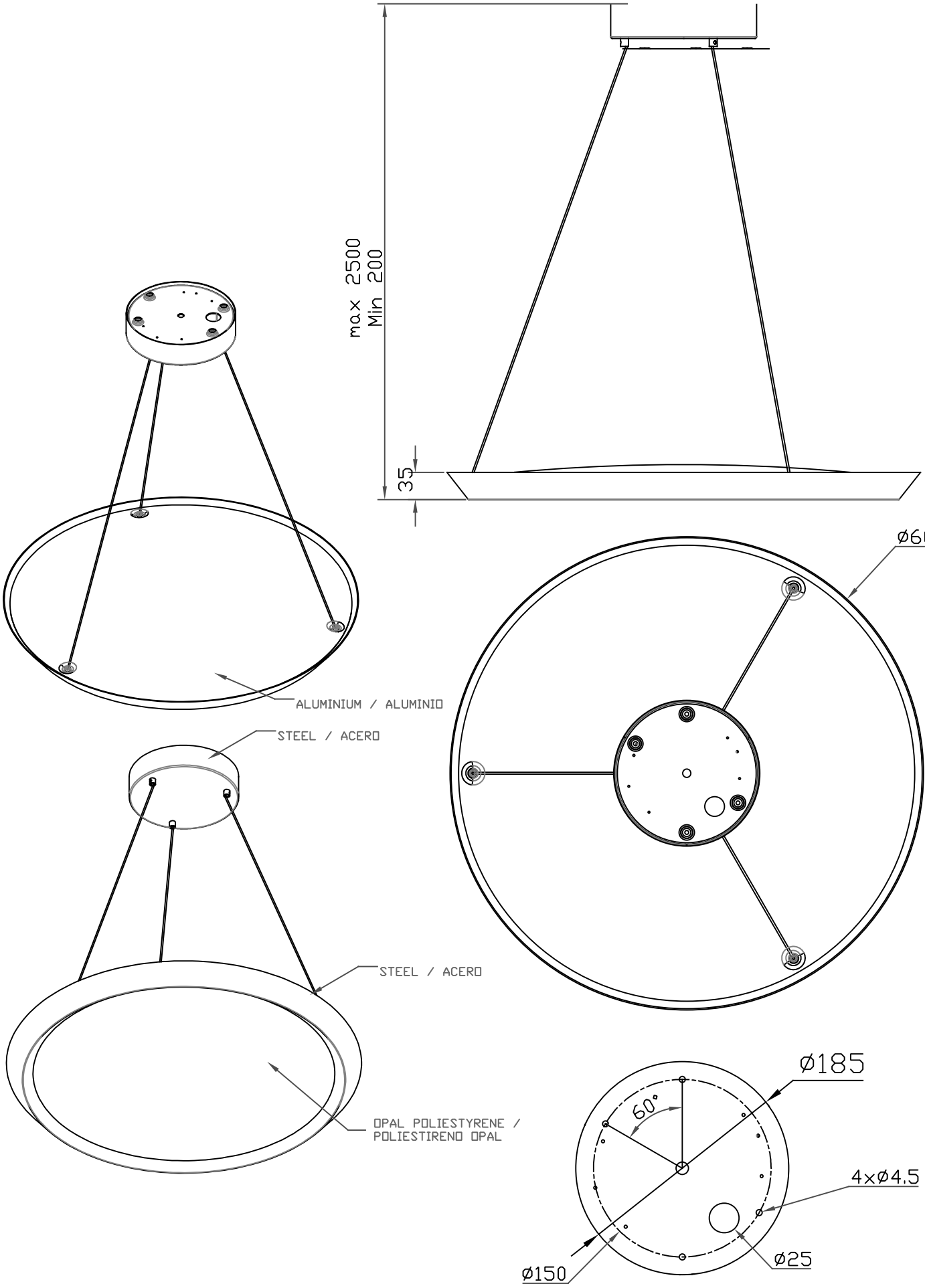
max 2500
Min 200
35
ALUMINIUM / ALUMINIO
STEEL / ACERO
STEEL / ACERO
OPAL POLIESTYRENE /
POLIESTIRENO OPAL
Ø600
Ø185
60°
4xØ4.5
Ø150
Ø25

24-01-17