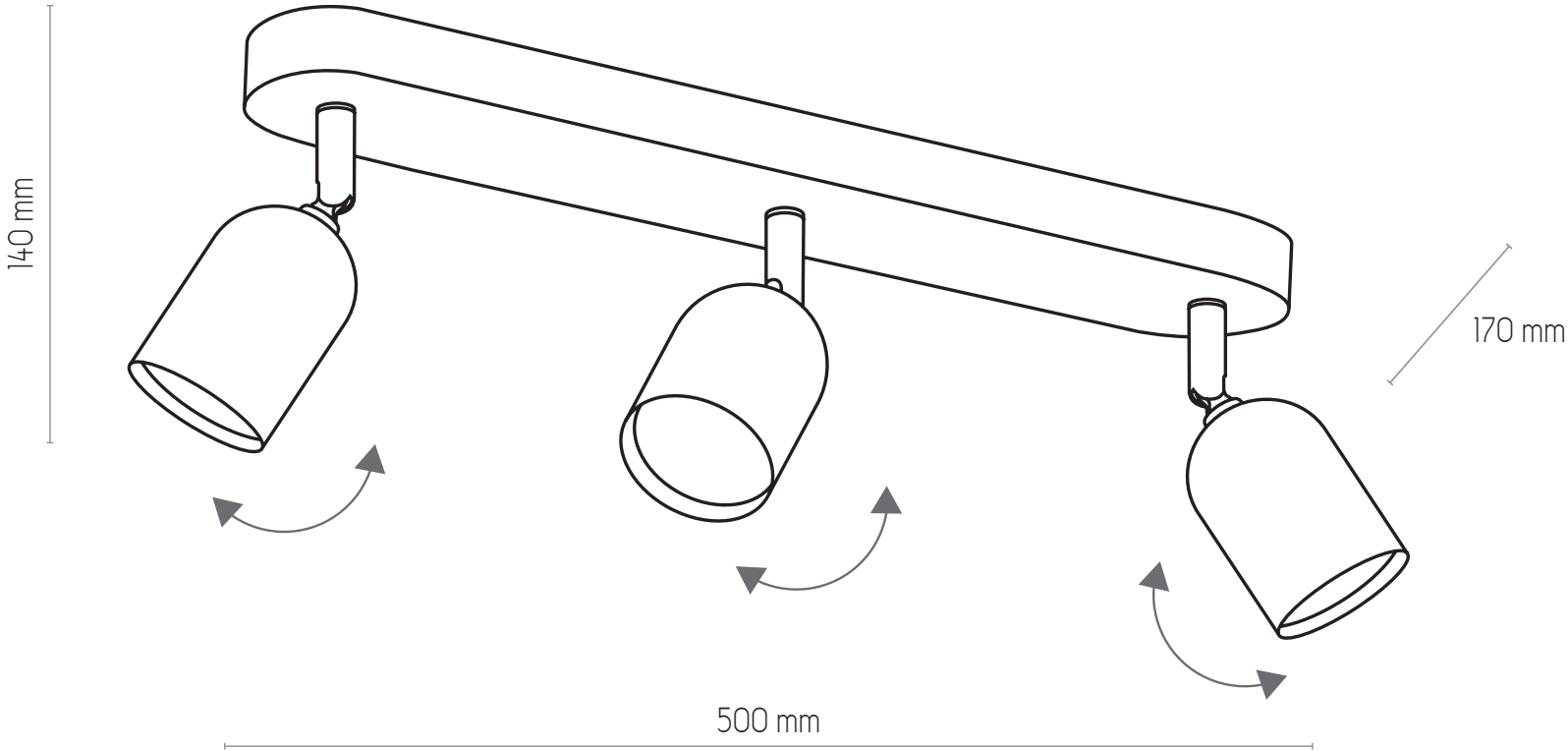
140 mm
170 mm
500 mm