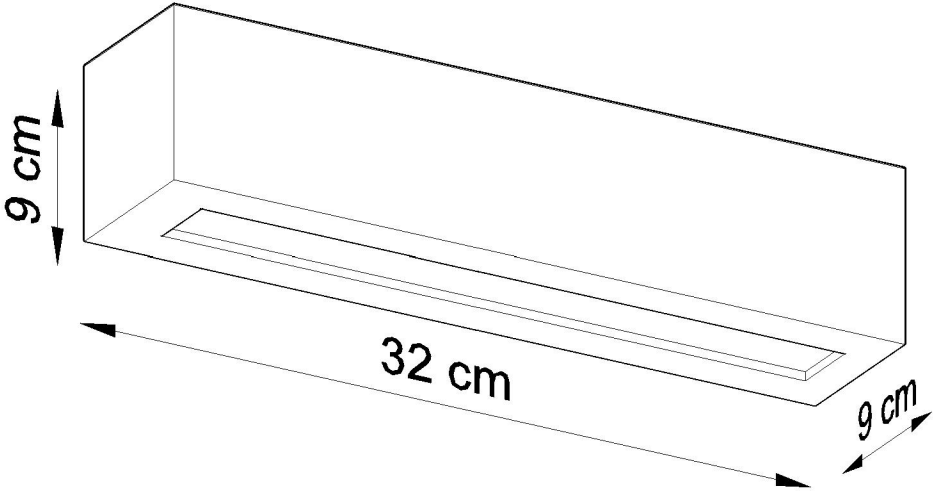
9 cm
32 cm
9 cm