OUTDOOR

05-9749
05-9750

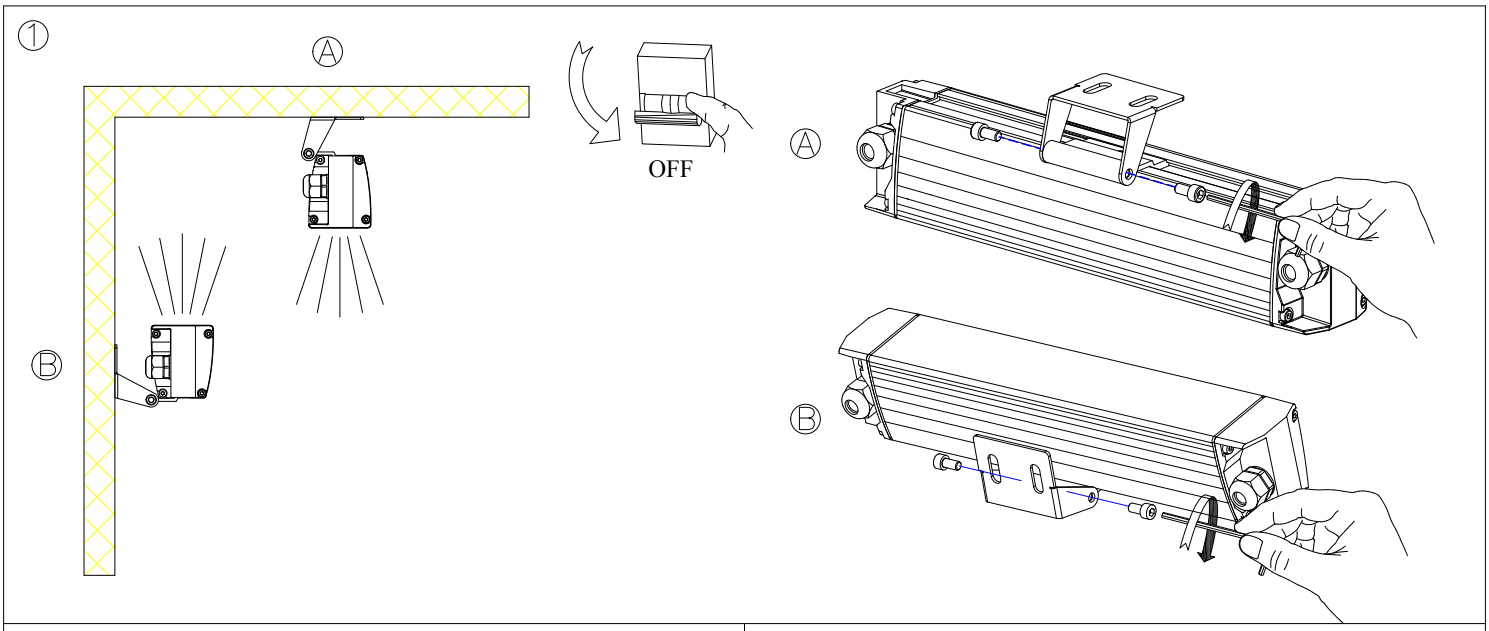

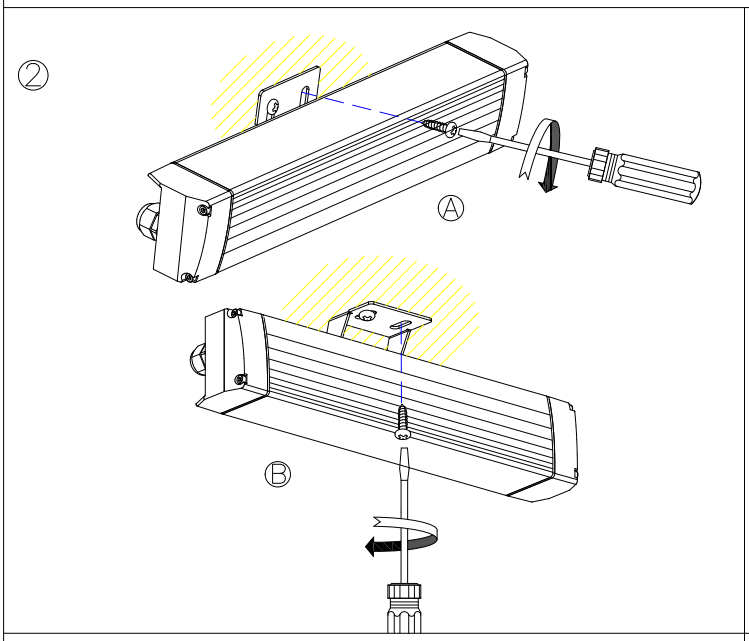

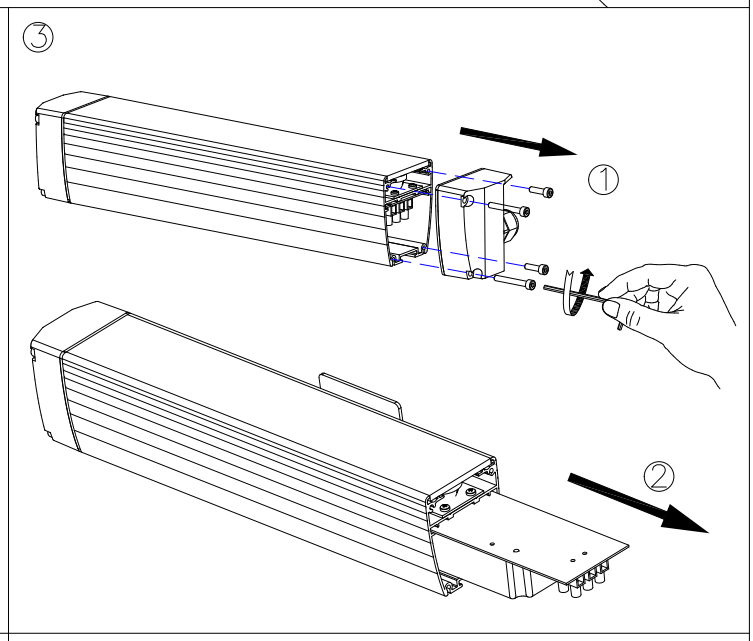

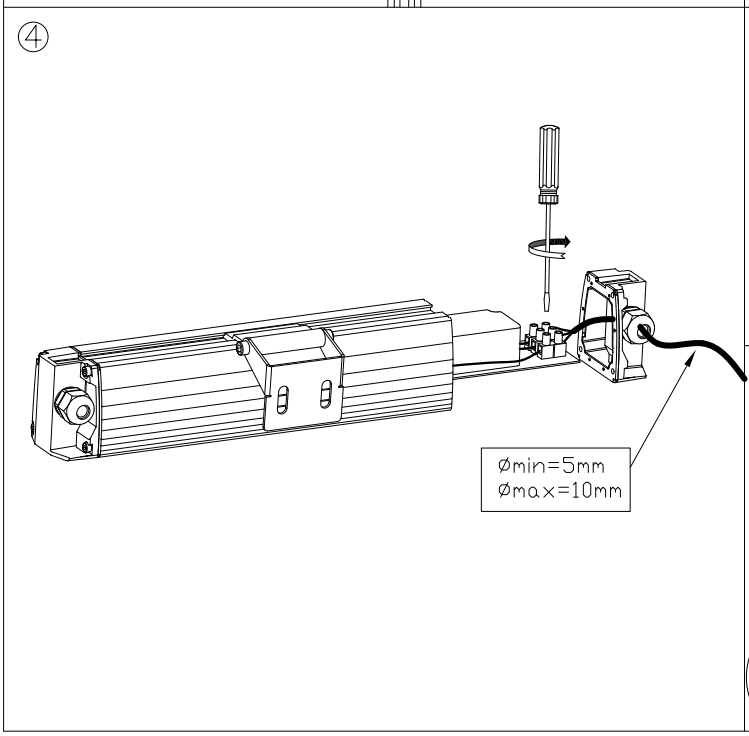

Option filter

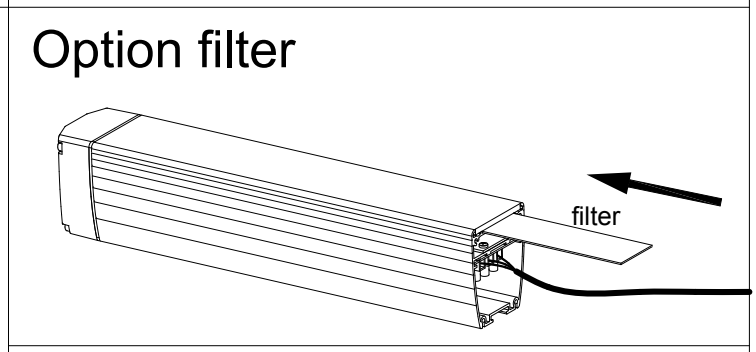

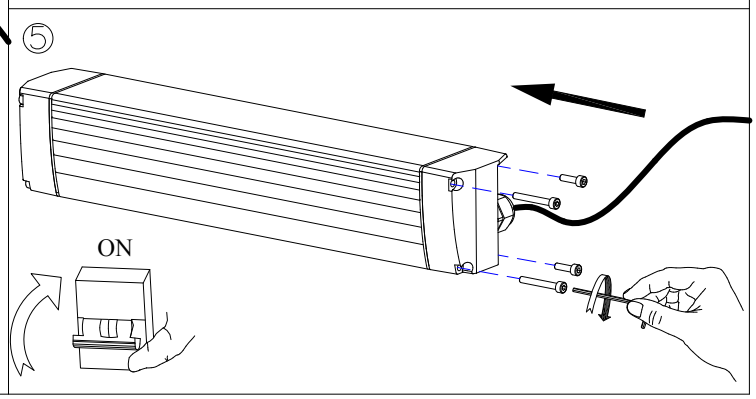

16-01-14