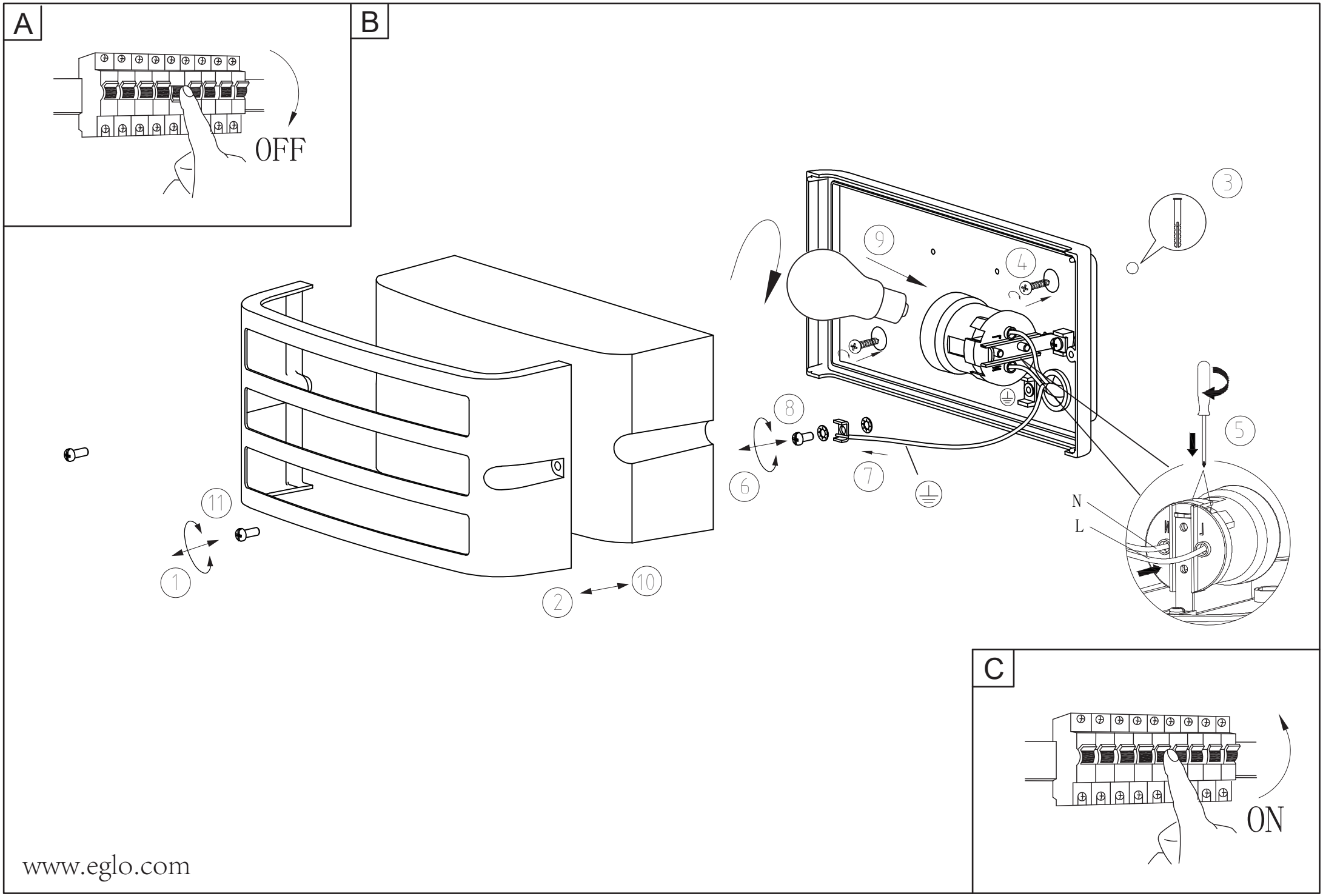
A
OFF
B
1
2
3
4
5
6
7
8
9
10
11
N
L
C
ON