GRAVITY
KATERYNA SOKOLOVA

forestier
PARIS

PENDANT LAMP GRAVITY 2

REFERENCE 21524 ●
REFERENCE 21525 ●

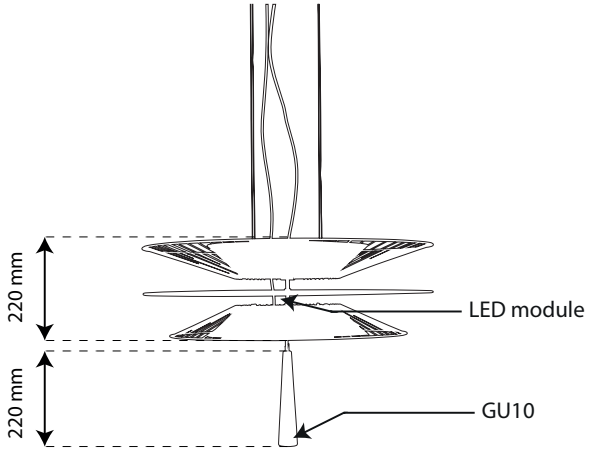

DIMENSIONS

HEIGHT	40 cm min
WIDTH	68 cm
DEPTH	68 cm
WEIGHT	6 kg
CANOPY	Ø 12 cm ht. 3 cm
CABLE LENGHT	250 cm

MATERIALS

LAMPSHADE	metal wire
CANOPY	metal
CABLE	textile

LIGHTING

BULB	GU10 + led module
INCLUDED	Yes
LED COMPATIBLE	Yes
WATTAGE	Led module 24W *2040 Lm - 3000K°* GU10 1x 3W *250 Lm - 3000K°*
SWITCH/DIMMER	no

COLORS

LAMPSHADE	● ●
CORD	● ●
CANOPY	● ●

PACKAGING

BOX 1

HEIGHT	36 cm
WIDTH	73 cm
DEPTH	73 cm
WEIGHT (WITH BOX)	10 kg

NORMS

CE	yes
IP	20
CLASS	I