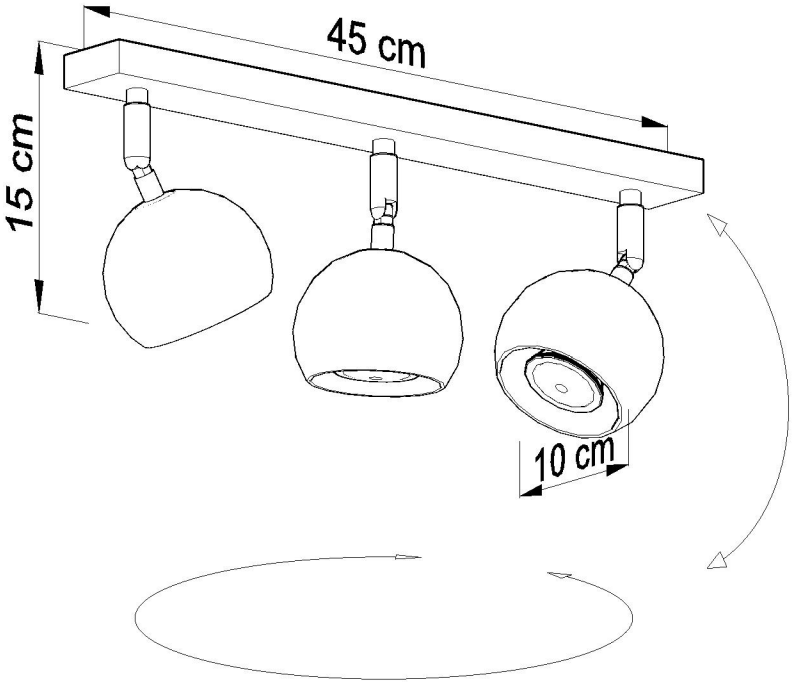
45 cm
15 cm
10 cm