LEDWORKS® COOPERATION

LEWORI
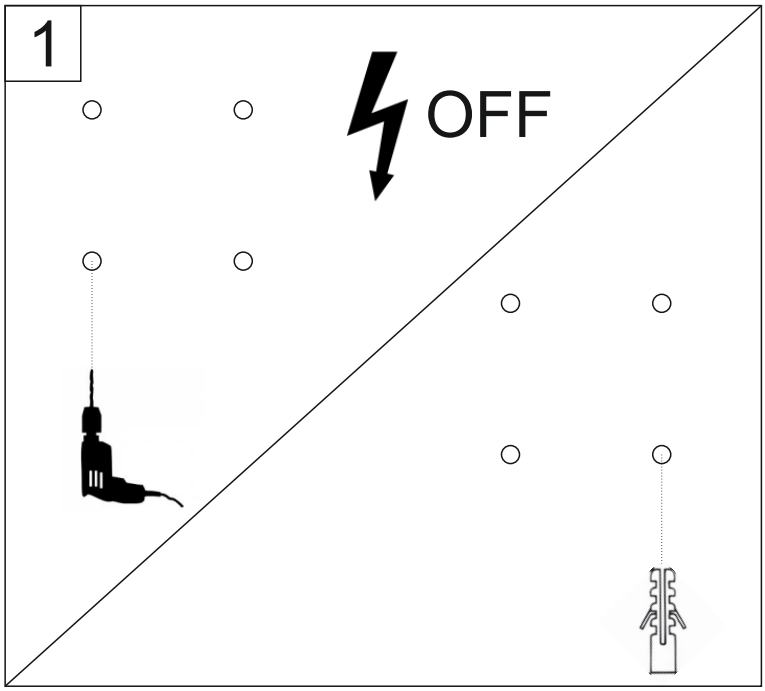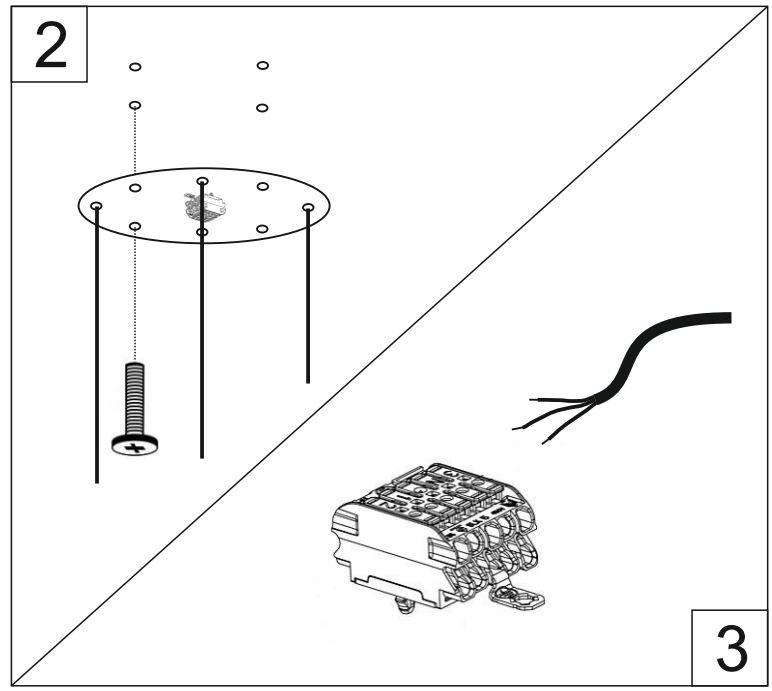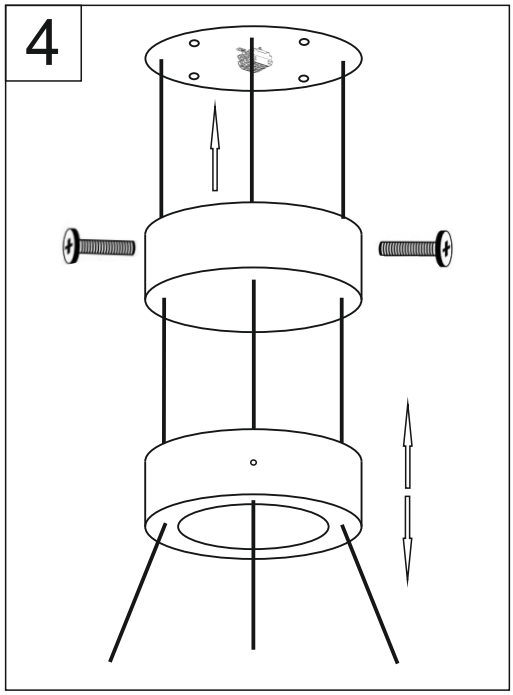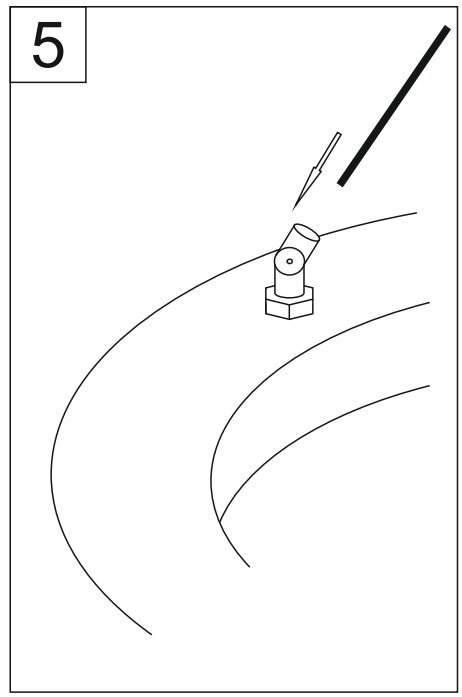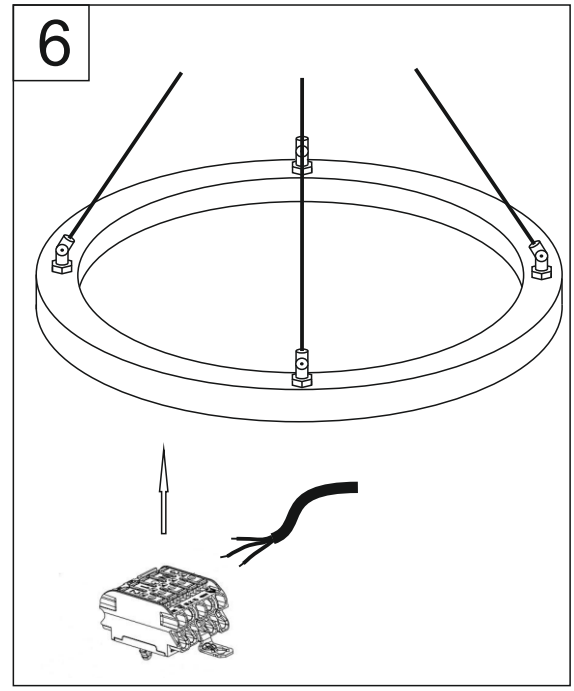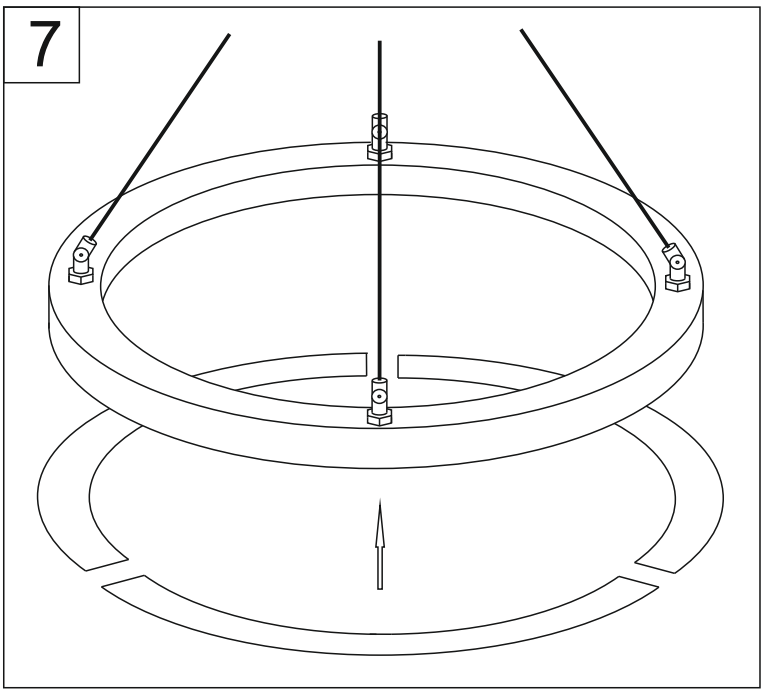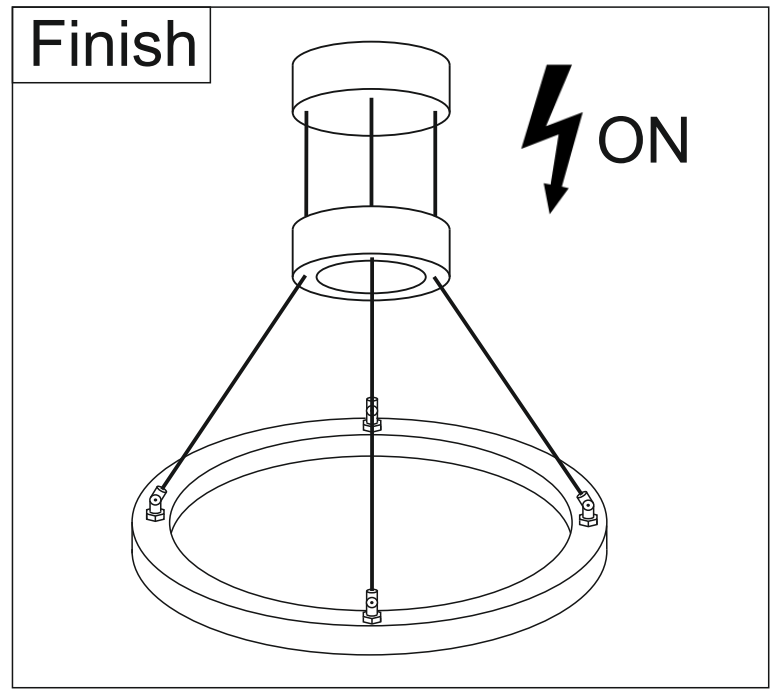
www.led-works.eu