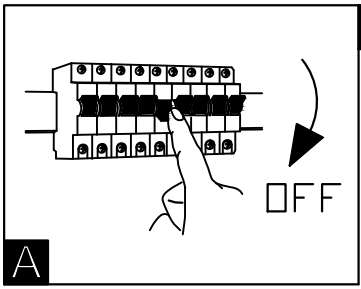

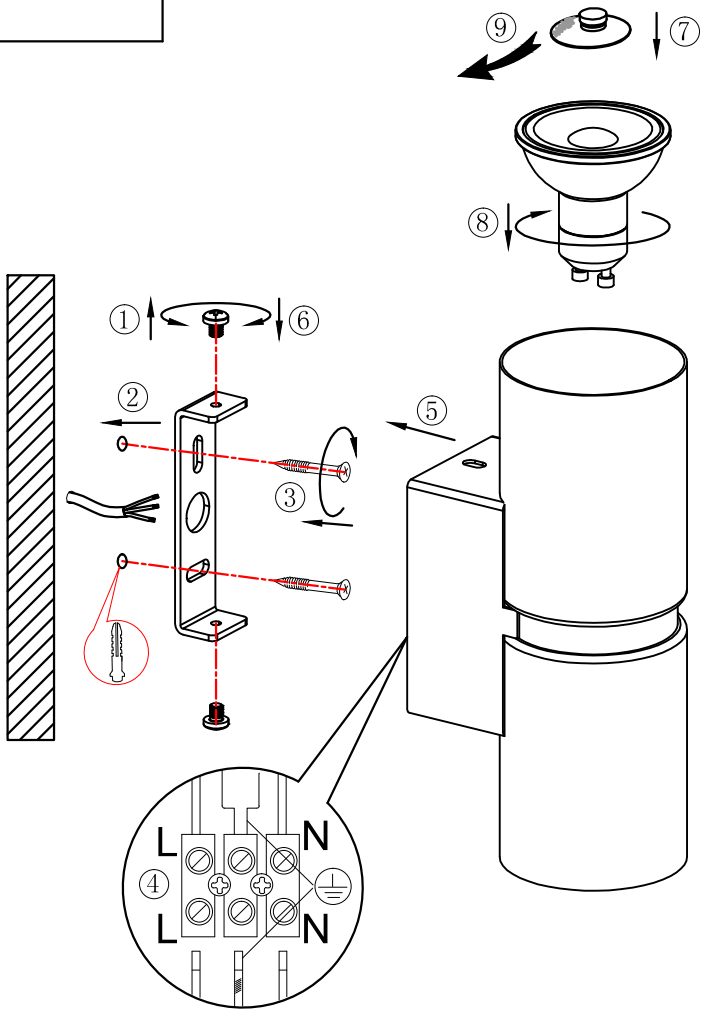

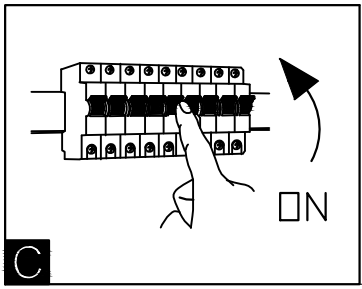

BLA95364-2