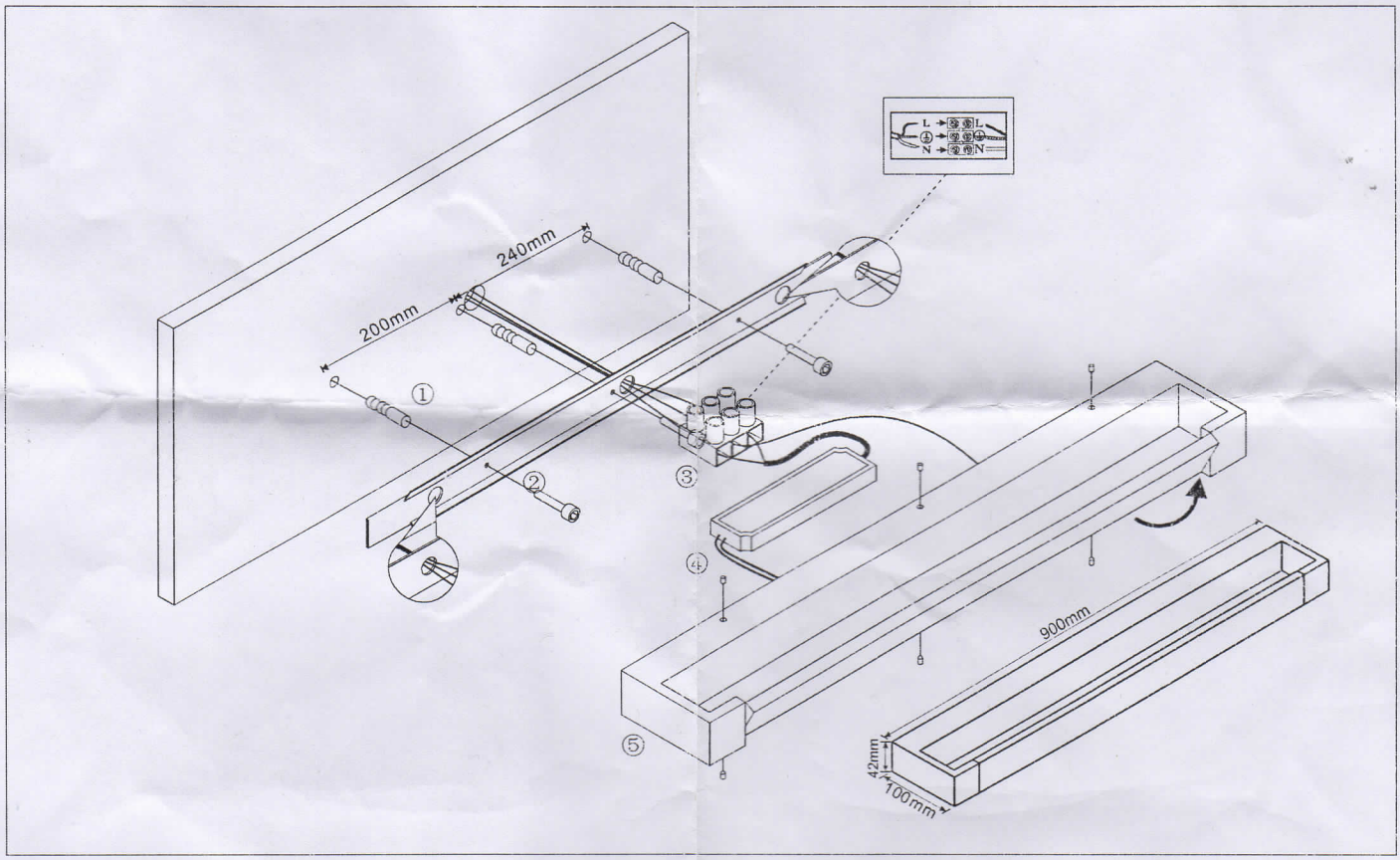orion Installation/Montageanweisung Soff 3-481