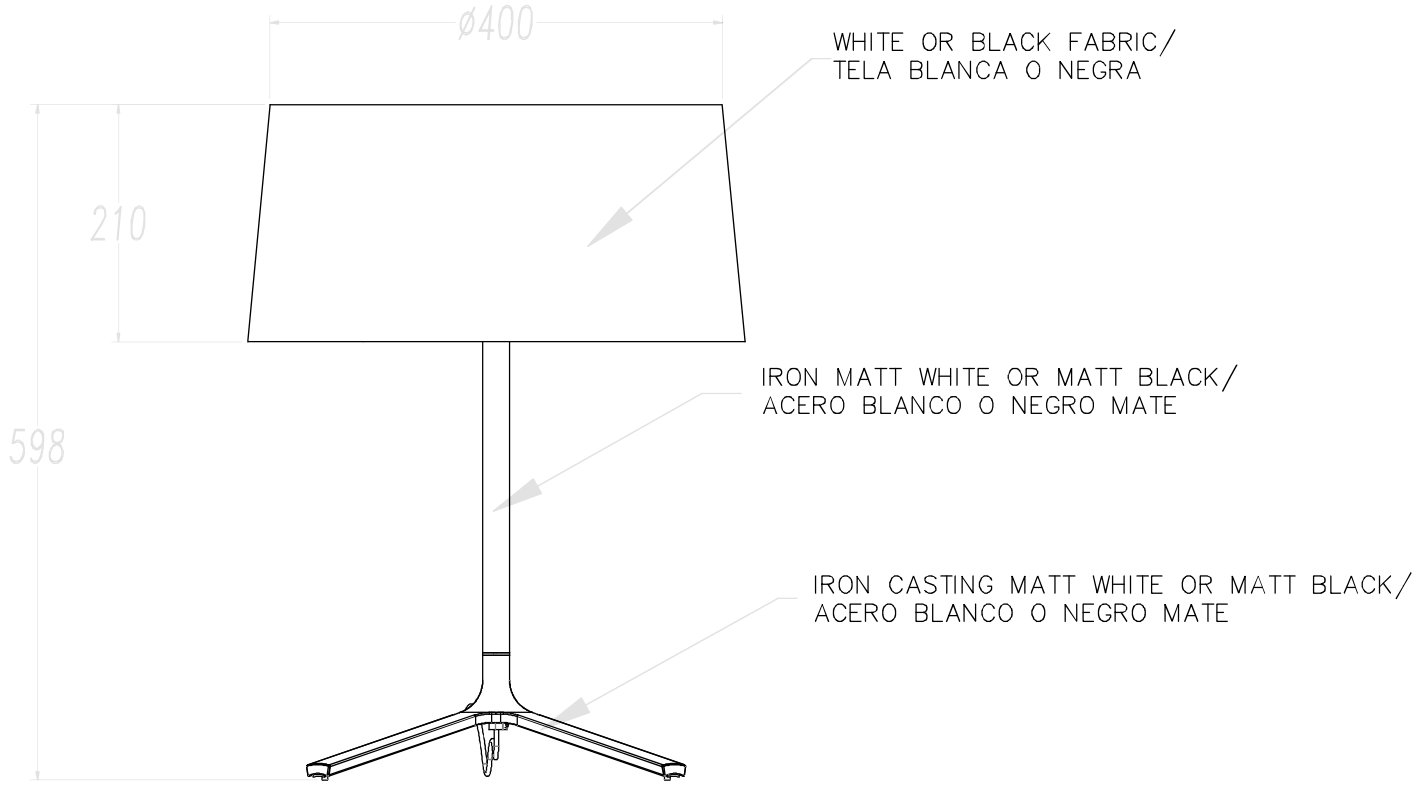
ø400
210
598
WHITE OR BLACK FABRIC/
TELA BLANCA O NEGRA
IRON MATT WHITE OR MATT BLACK/
ACERO BLANCO O NEGRO MATE
IRON CASTING MATT WHITE OR MATT BLACK/
ACERO BLANCO O NEGRO MATE

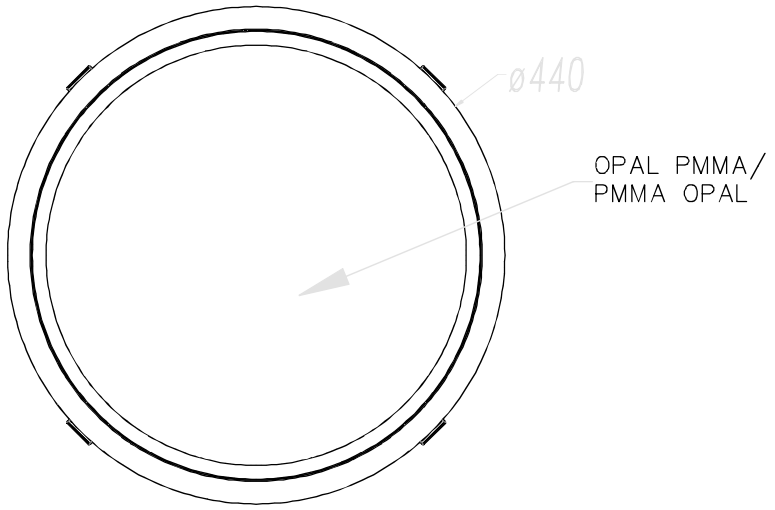
ø440
OPAL PMMA/
PMMA OPAL