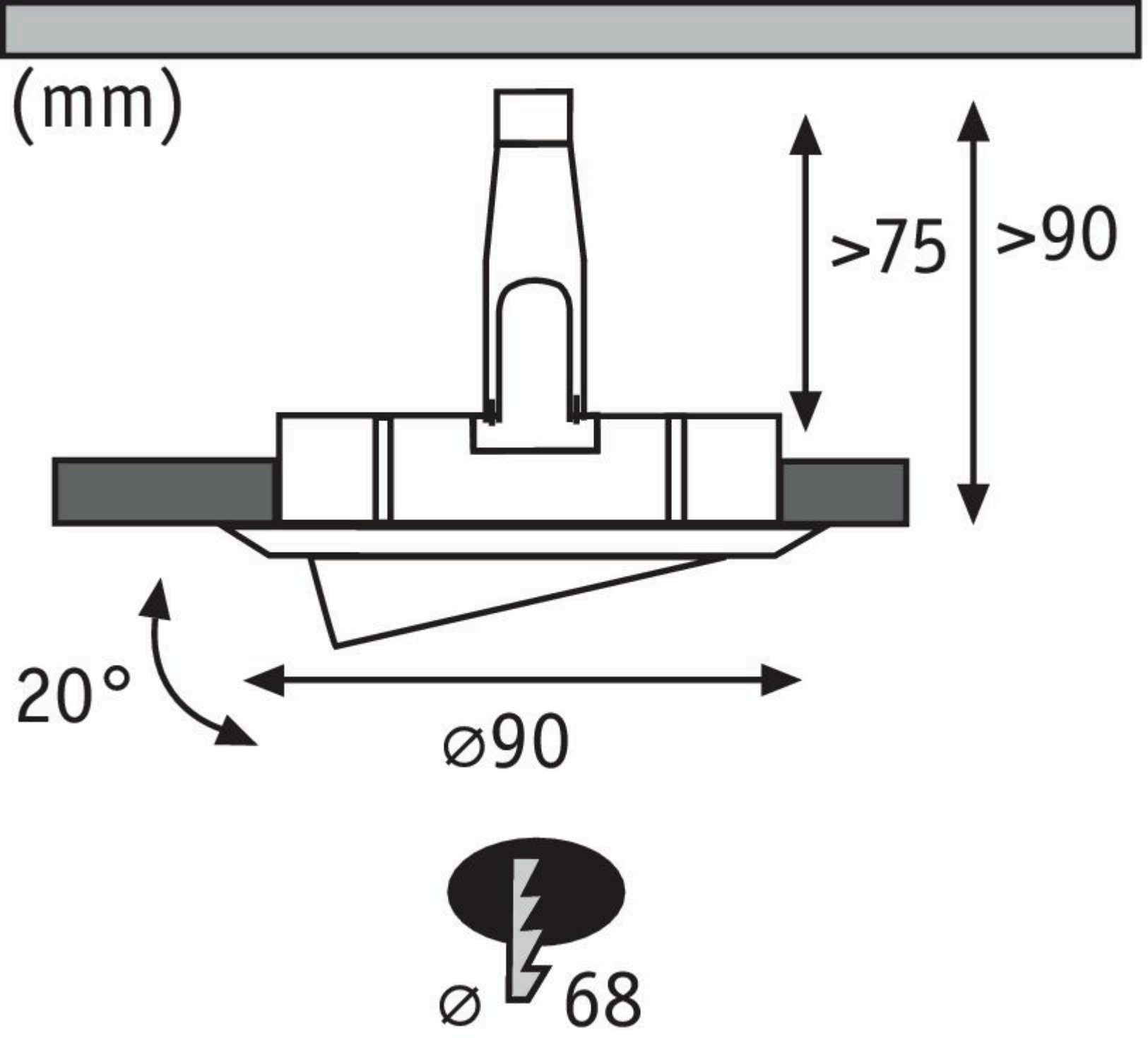
(mm)
>75
>90
20°
⌀90
⌀ 68